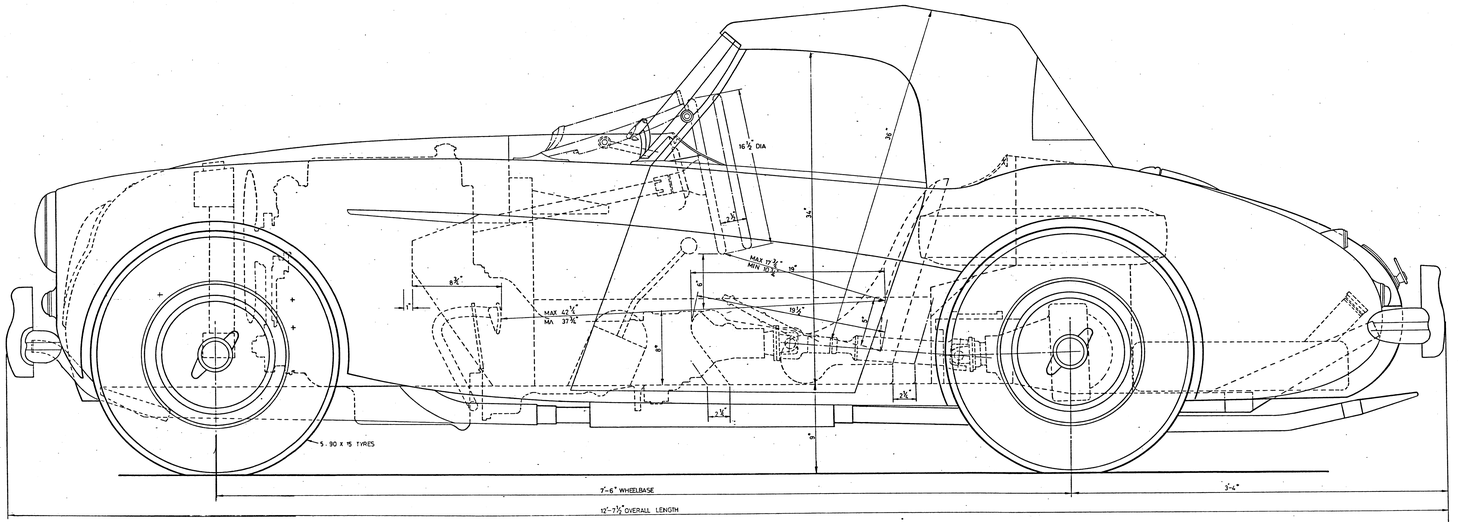

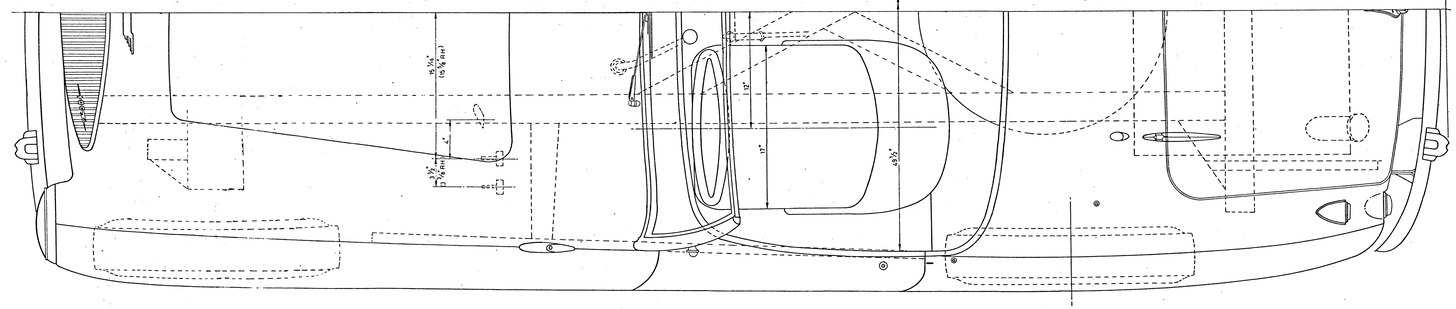

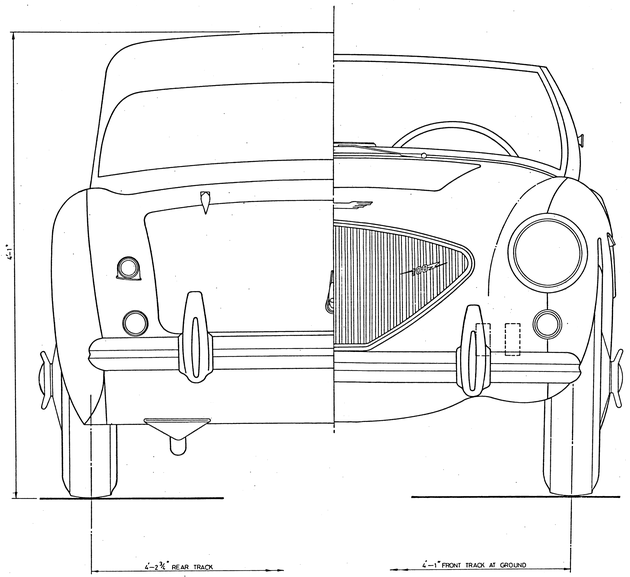

DIMENSIONS SHOWN ARE OBTAINED FROM ASSEMBLY LAYOUTS AND MAY BE SUBJECT TO PRODUCTION VARIATIONS

ASSEMBLY DRG	TITLE			
BNI	AUSTIN HEALEY 100 2 DOOR 2 SEATER ROADSTER	T	M.A.S.	15.7.53.
		D		
		C	[illegible]	[illegible]
		P	[illegible]	28.7.53 DESIGNS DEPT
THE AUSTIN MOTOR CO LTD BIRMINGHAM	SCALE:- ¼ FULL SIZE			