SECTION N

BODY & EXHAUST SYSTEM

3·8 "E" TYPE
GRAND TOURING MODELS

INDEX

BODY

INDEX *(Continued)*

INDEX *(Continued)*

EXHAUST SYSTEM

BODY AND EXHAUST SYSTEM

BODY

SIDE FACIA PANEL

Removal (Left-hand Drive)

Disconnect the positive lead on the battery. Unscrew the two chrome bezels securing the speedometer trip and the time clock control cables to the under scuttle casings.

Remove the two under scuttle casings by unscrewing the drive screws and withdrawing the casings away from the retaining clips.

Withdraw the headlamp, ignition and fuel warning lights from the rear of the speedometer. Disconnect the speedometer drive cable from the rear of the speedometer.

Remove the upper steering column top fixing bolt and nut securing the column to the support bracket, noting the distance tube between the bracket side flanges.

Release the upper steering column lower mounting bolts and nuts.

Disconnect the flasher switch cables from the multi-snap connector attached to the harness and located behind the facia panel. Lower the column and allow the steering wheel to rest on the driver's seat.

Remove the two thumb screws securing the centre instrument panel to the body and allow the panel to rest in the horizontal position. Remove the three slotted setscrews and lockwashers retaining the side facia panel to the centre instrument panel support brackets.

Remove the headlamp dipper switch from the side facia panel by removing the chrome ring nut securing the switch to the facia and withdrawing the switch lever through the panel.

Remove the two nuts and washers at the rear of the side facia panel securing the panel to the bracket attached to the body adjacent to the door hinge post.

Detach the panel.

Release the two setscrews securing the two heater control inner cables to the control levers and withdraw the cables.

Withdraw the two instrument illumination bulb holders from the speedometer.

Withdraw the two instrument illumination bulb holders from the revolution counter. Withdraw the two flasher indicator warning light bulb holders from the indicator light unit.

Disconnect the clock connection at the snap connector.

Remove the two cables from the brake fluid warning light.

Disconnect the two "Lucar" connectors from the rear of the revolution counter.

Remove the side facia panel.

Removal (Right-hand Drive)

Disconnect the positive lead on the battery. Unscrew the two chrome bezels securing the speedometer trip and the time clock control cables to the under scuttle casings. Remove the under scuttle casings by unscrewing the drive screws and withdrawing the casings away from the retaining clips.

Withdraw the headlamp, ignition and fuel warning lights from the rear of the speedometer.

Disconnect the drive cable from the rear of the speedometer.

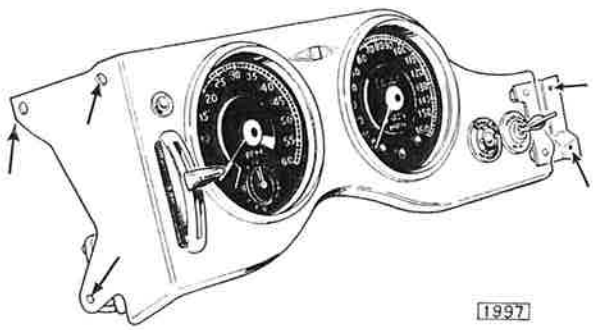

Fig. 1. Location of the side facia panel attachment points (Right hand drive).

Remove the upper steering column top fixing bolt and nut securing the column to the support bracket noting the distance tube between the bracket side flanges.

Release the upper steering column lower mounting bolts and nuts.

Disconnect the flasher switch cables from the multi-snap connector attached to the harness and located behind the facia panel.

Lower the column and allow the steering wheel to rest on the driver's seat.

Remove the two thumb screws securing the centre instrument panel to the body and allow the panel to rest in the horizontal position.

Remove the three slotted setscrews and lock washers retaining the side facia panel to the instrument panel support bracket. Remove the bolt, nut and washer retaining the mixture control bracket to the centre panel support bracket.

Remove the headlamp dipper switch from the side facia panel by removing the chrome ring nut securing the switch to the facia and withdrawing the switch lever through the panel. Remove the two nuts and washers at the rear of the side facia panel securing the panel to the bracket attached to the body adjacent to the door hinge post.

Detach the panel.

Release the setscrew securing the mixture control inner cable to the control lever and withdraw the cable; remove the mixture control warning light bulb holder and disconnect the two cables from the warning light switch. Withdraw the two instrument illumination bulb holders from the speedometer.

Withdraw the two instrument illumination bulb holders from the revolution counter and disconnect the two "Lucar" connectors from the rear of the instrument.

Withdraw the flasher indicator warning light bulb holders from the indicator light unit.

Disconnect the two cables from the brake fluid warning light.

Disconnect the clock connection at the snap connector.

Remove the side facia panel.

Refitting

Refitting is the reverse of the removal procedure, but particular attention must be paid to the following points.

When refitting the headlamp dipper switch note that the terminals with the Blue/Yellow and Blue/Green cables attached are uppermost and that the flat on the switch stem is registering correctly with the flat in the mounting hole.

Insert the flasher warning lights into their correct sockets; that is. with the warning light attached to the black/white cable in the right-hand indicator bulb holder and the black/red cable in the left-hand side.

Left-hand Drive

Reconnect the two heater control cables ensuring that the full movement of the lever marked "HOT and COLD" with the water control tap and the lever marked "OFF AIR-ON" with the air control flap is maintained. For full instructions on adjustment see Section O, "Car Heating and Ventilating Equipment".

Right-hand drive

Reconnect the mixture control cable ensuring that the full movement of the control lever and the lever on the carburetter is maintained.

To adjust the control pass the cable through the boss on the lever, place the lever in the "COLD" position and position the lever on the carburetter towards the rear of the engine. Tighten the setscrew securing the cable control wire and recheck.

Refit the steering column and adjust for rake.

Reconnect the flasher indicator switch cables to the multi-snap connector using the wiring diagram as a reference.

GLOVEBOX

Removal

Disconnect the positive lead on the battery. Remove the under scuttle casing by unscrewing the drive screws and withdrawing casing away from the retaining clips.

Remove the two thumb screws securing the centre instrument panel to the body and allow the panel to rest in the horizontal position.

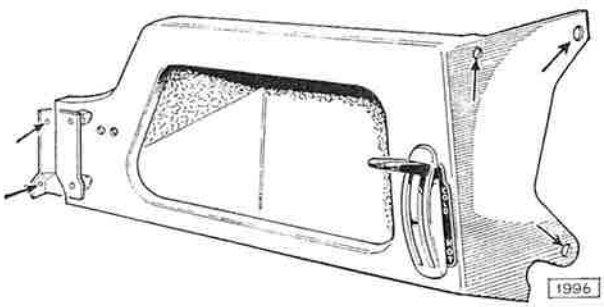

Fig. 2. Location of the glovebox attachment points (Right hand drive).

Remove the grab handle by removing the two setscrews from the hidden face of the glovebox, and on early cars, one screw from the base of the screen pillar exposed after lifting the draught rubber and pulling away the trim welt; on later models remove one setscrew securing the handle to the bracket located at the base of the pillar.

Remove the three slotted setscrews and lock washers retaining the glovebox to the centre instrument panel support bracket.

Remove the two nuts and lock washers at the rear of the glovebox securing the glovebox to the bracket attached to the body adjacent to the door hinge post.

On right-hand drive cars disconnect the heater controls as detailed on page 5. (Side facia, Removal —Left-hand drive).

On left-hand drive cars disconnect mixture control warning light and switch as detailed on page 5. (Side facia, Removal—Right-hand drive).

Refitting

Refitting is the reverse of the removal procedure, but particular attention must be paid to maintaining full movement of the heater control on right-hand drive cars as detailed on page 6 (Side facia, Refitting), and the mixture control on left-hand drive cars as detailed on page 6 (Side facia, Refitting).

TOP FACIA PANEL

Removal

Disconnect the positive lead on the battery.

Remove all under scuttle casings by unscrewing the drive screws and withdrawing casings away from the retaining clips. Remove central console panel by removing the four large round headed setscrews attaching console to the body brackets. Withdraw console away from facia. If a radio is fitted to the car, withdraw control head complete with the console after detaching the aerial and power cables.

Remove the thumb screws securing the centre instrument panel to the body and allow the panel to rest in the horizontal position. Remove the two $\frac{3}{16}$" nuts, lockwashers and plain washers securing the top facia panel to the brackets attached to the centre panel supports. Remove the two outer fixing nuts and washers securing the panel to the brackets attached to the body side panel below the screen pillars.

Withdraw the three flexible demister conduit pipes from the rubber elbow connections attached to the bulkhead below the instrument panel.

Disconnect the two cables attached to the map light.

Remove the top facia panel complete with the demister nozzles and pipes.

Refitting

Refitting is the reverse of the removal procedure. Utilizing the slotted holes in the brackets adjust the forward edge of the facia to the screen frame.

BONNET

To Open (Early cars)

To open the bonnet insert the "T" handle provided into the lock and on the right-hand side turn the key clockwise and on the left-hand side turn the key anti-clockwise.

This will release the bonnet which will now be retained by the safety catch.

Insert the fingers under the rear edge of the bonnet and press in the safety catch.

To Open (Later cars)

To open turn the two small levers located on the right and left-hand door hinge posts anti-clockwise and pull to full extent. This will release the bonnet which will now be retained by the safety catch.

Insert the fingers under the rear edge of the bonnet and press in the safety catch.

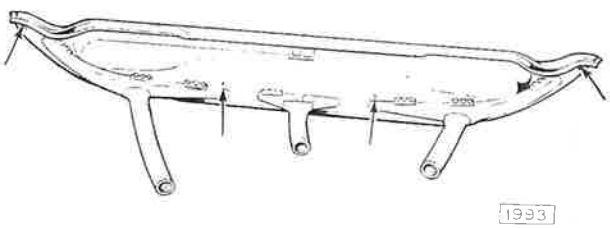

Fig. 3. Location of the top facia panel attachment points.

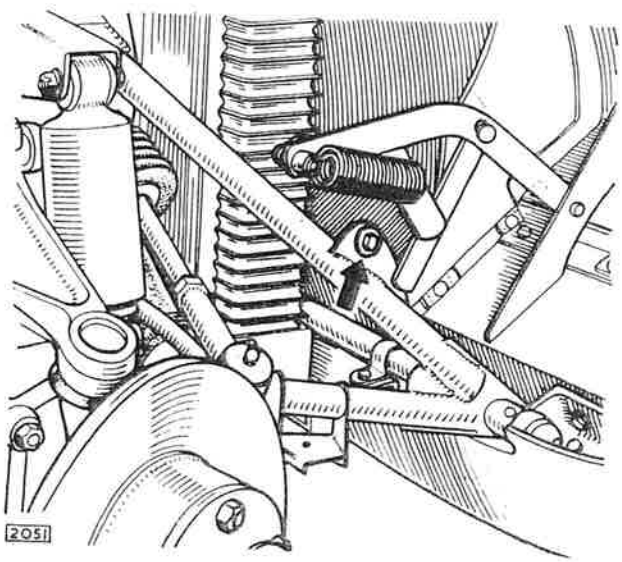

Fig. 4. The bonnet spring mechanism pivot points.

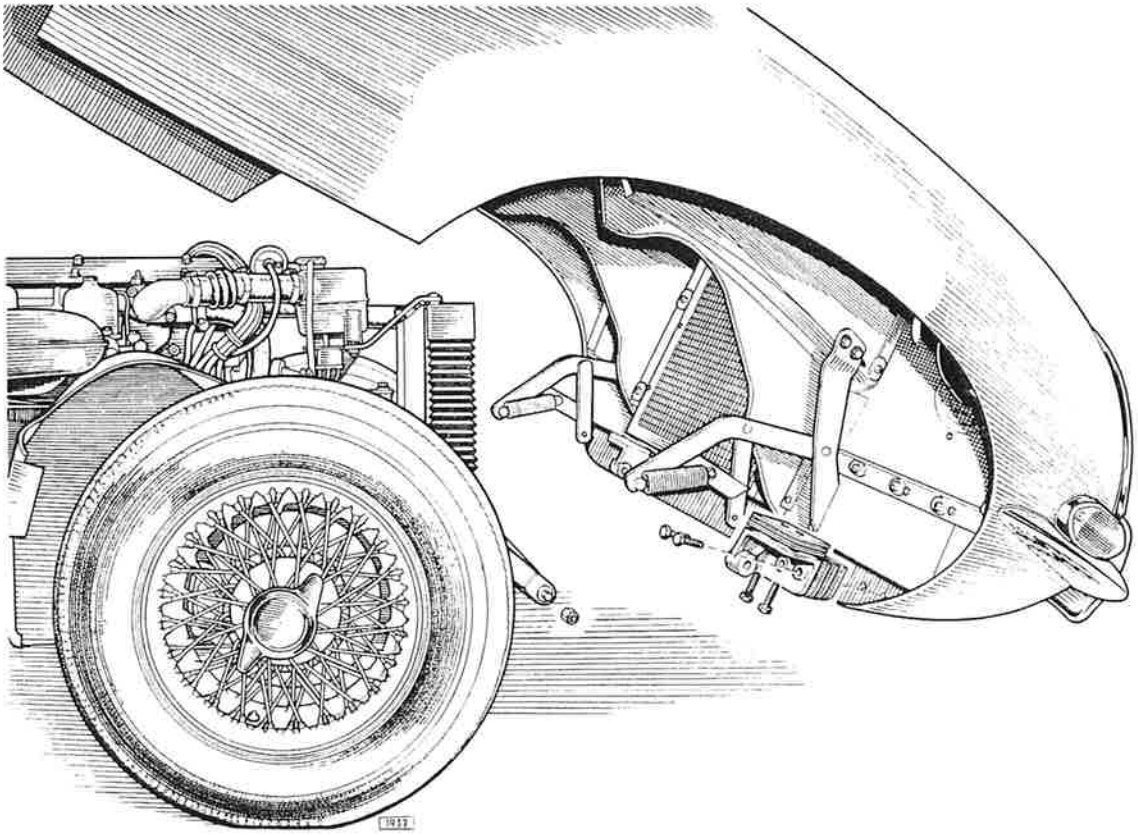

Fig. 5. The bonnet hinge mountings.

Removal

Disconnect the multi-pin socket from the left-hand side of the bonnet.

Mark the position of the hinges on the bonnet to facilitate refitting.

Remove the two self-locking nuts and washers securing the bonnet hinges to the front sub-frame mounting pin (Fig. 5).

Remove the two pivot pins and nuts securing the helper spring mechanism to the sub-frame (Fig. 4).

Supporting the bonnet, remove the four setscrews and washers securing the left-hand hinge to the bonnet (Fig. 5).

Remove the hinge noting the amount and location of the packing pieces between the hinge and the bonnet.

Still supporting the bonnet slide the right-hand hinge off the mounting pin and remove the bonnet.

Refitting

Refitting is the reverse of the removal procedure. The multi-pin electrical socket will only fit into the plug one way and therefore it is essential to mate the socket correctly with the pins (Fig. 6).

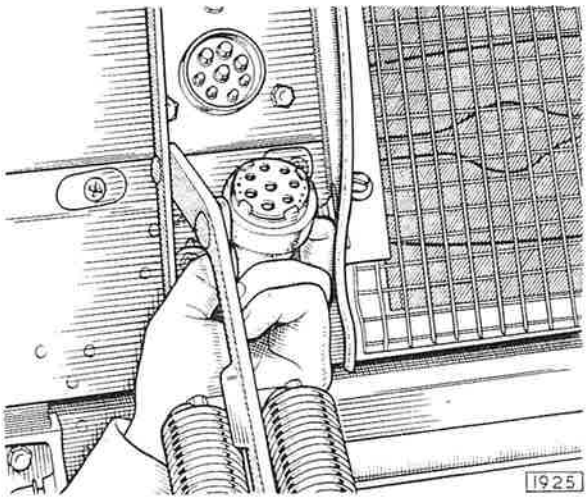

Fig. 6. Location of the multi-pin socket connections.

Adjustment (Early cars)

To ensure locking of the bonnet, adjustment is provided by means of packing pieces inserted under the bonnet lock plate attached by two screws to the body. Remove or add packing pieces until lock pawl retains bonnet firmly when locked.

Adjustment (Later cars)

To ensure secure locking of the bonnet, adjustment is provided by means of rubber buffers attached to the adjustable spigot pins. To adjust bonnet release spigot pin locknut, turn the pin until the lock pawl retains bonnet firmly when locked. Re-tighten the locknut.

Accidental Damage

The bonnet is composed of eleven main components each of which is replaceable if damaged. The components are listed below:

1. Bonnet side panel (Right-hand side).
2. Bonnet side panel (Left-hand side).
3. Bonnet centre panel.
4. Front under panel.
5. Front diaphragm (Right-hand side).
6. Front diaphragm (Left-hand side).
7. Rear diaphragm (Right-hand side).
8. Rear diaphragm (Left-hand side).
9. Valance (Right-hand side).
10. Valance (Left-hand side).
11. Air duct lower.

MOTIF BAR

Removal

To remove the motif bar from the bonnet orifice remove the two hexagon headed setscrews securing the bar to the two front bumpers. These setscrews are accessible from the rear of the bumper extension pieces and require the use of a $\frac{7}{16}$" A.F. socket wrench; preferably of the rachet type.

Refitting

Refitting is the reverse of the removal procedure.

BONNET SIDE PANEL

Removal

Remove the bonnet as detailed on page 8.

Remove the glass headlamps cover and duct as detailed on page 13. "FRONT Bumper—Removal".

Remove the front bumper as detailed on page 13.

Remove the side/flasher lamp after detaching the cover by removing the three fixing screws and disconnecting the two attached cables from the snap connectors in the headlamp nacelle.

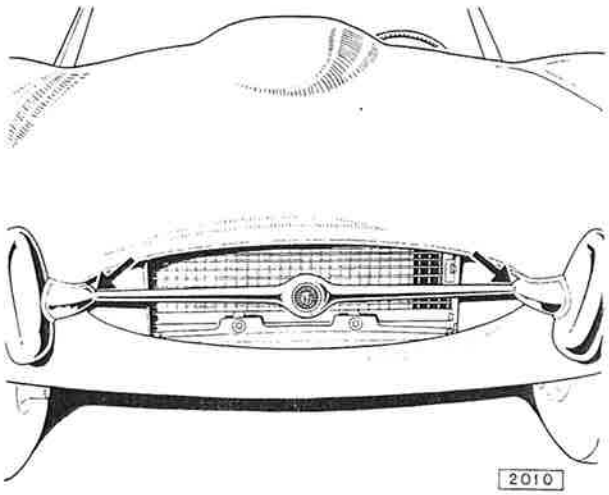

Fig. 7. The motif bar fixings.

Remove the 5 bolts, nuts, plain and lock washers from the bottom flange securing the side panel to the under panel and the two bolts, nuts, plain and lock washers securing the side panel to the centre panel.

Remove the four bolts, nuts, plain and lock washers securing the side panel to the headlamp mounting diaphragm and the nine bolts, nuts and washers attaching the side panel to the centre panel along the crown line of the side panel.

Remove the five bolts, nuts and washers securing the side panel to the engine valance panel and the four bolts, nuts and washers attaching the side panel to the rear diaphragm.

Straighten the brass tabs of the two chromium beading strips, nine clips will be found on the long strip and two on the smaller one. Remove the closing plate attaching the side panel to the centre panel at the rear by withdrawing the four setscrews and washers. Remove the panel.

Refitting

Refitting is the reverse of the removal procedure.

Care must be taken during assembly to ensure that the edge lines of the centre section and the side panel are flush when bolted together. Failure to maintain this will prevent the chrome strip from fitting neatly to the bonnet.

Refit chrome strips as detailed on page 13. After assembly generously coat all under wing joints with a good quality sealing compound.

BODY

BONNET CENTRE SECTION

Removal

Remove the bonnet as detailed on page 8.

Remove both glass head lamp covers and ducts as detailed on page 13. "Front Bumper—Removal".

Remove both front bumpers as detailed on page 13. and motif bar as detailed on page 9.

Remove the radiator stone guard after unscrewing the eight cross headed drive screws and the two bolts and nuts securing the guard to the bonnet, withdraw the guard from the bottom noting the felt sealing strip at the top edge. From the right-hand side remove the ten cross headed drive screws and washers attaching the centre section to the valance and three screws from the rear diaphragm. From inside the headlamp nacelle remove the two bolts and nuts and washers from the vertical flange attaching the side panel to the centre section and the two bolts, nuts and washers securing the section to the under panel. Straighten the brass tabs of the two chrome beading strips and remove the nine bolts, nuts and washers securing the centre section to the side panel along the crown line.

Remove the beading strips and the closing plate connecting the centre section to the side panel at the rear after withdrawing the four setscrews and washers.

Repeat the operation to the left-hand side.

Refitting

Refitting is the reverse of the removal procedure. Care must be taken during assembly to ensure that the edge lines of the centre section and the side panel are flush when bolted together. Failure to maintain this will prevent the chrome strips from fitting neatly to the bonnet.

Refit chrome strips as detailed on page 13. When refitting the radiator stone guard ensure that the felt sealing strip is in good condition. Renew if necessary.

After assembly generously coat all under wing joints with a good quality sealing compound.

AIR VENT GRILLE

The chromium plated grille located at the rear of the centre section of the bonnet can be detached after removing the two bolts and nuts from the bottom edge and the two spring steel nut fasteners from the top fixing pegs.

Utilize the external flats of a $\frac{7}{16}''$ A.F. tubular spanner to remove the nut fasteners.

Refitting is the reverse of the removal procedure.

BONNET SAFETY CATCH

Remove the bonnet safety catch by unscrewing the four setscrews and washers. When refitting adjust the catch utilizing the slotted holes so that the lever will retain the bonnet when the locks are released, but will, when pressed, allow the bonnet to be fully opened.

THE UNDER PANEL

Removal

Remove the bonnet as detailed on page 8.

Remove both headlamp covers and ducts as detailed on page 13, under "Front Bumper—Removal". Remove both front bumpers as detailed on page 13, and the motif bar as detailed on page 9.

Remove the radiator stone guard after unscrewing the eight cross headed drive screws and the two bolts and nuts securing the guard to the bonnet. Withdraw the guard from the bottom noting the felt sealing strip at the top edge.

From the right-hand side of the bonnet remove the bolts, nuts and washers located in the headlamp nacelle securing the under panel to the centre section and side panel.

Remove the bottom hinge bracket after withdrawing four setscrews and lock washers. Note the quantity of spacer shims fitted.

Mark the position of the bonnet spring bracket for reference when refitting, remove the spring bracket after withdrawing four setscrews.

Remove the five cross headed drive screws retaining the under panel to the head lamp mounting diaphragm and the two cross headed drive screws securing the under panel to the valance.

Repeat the sequence for the left-hand side.

Remove the three cross headed drive screws and the two bolts, nuts and washers attaching the under panel to the orifice lower panel.

Remove the lower panel.

Refitting

Refitting is the reverse of the removal procedure. After assembly generously coat all under wing joints with a good quality sealing compound.

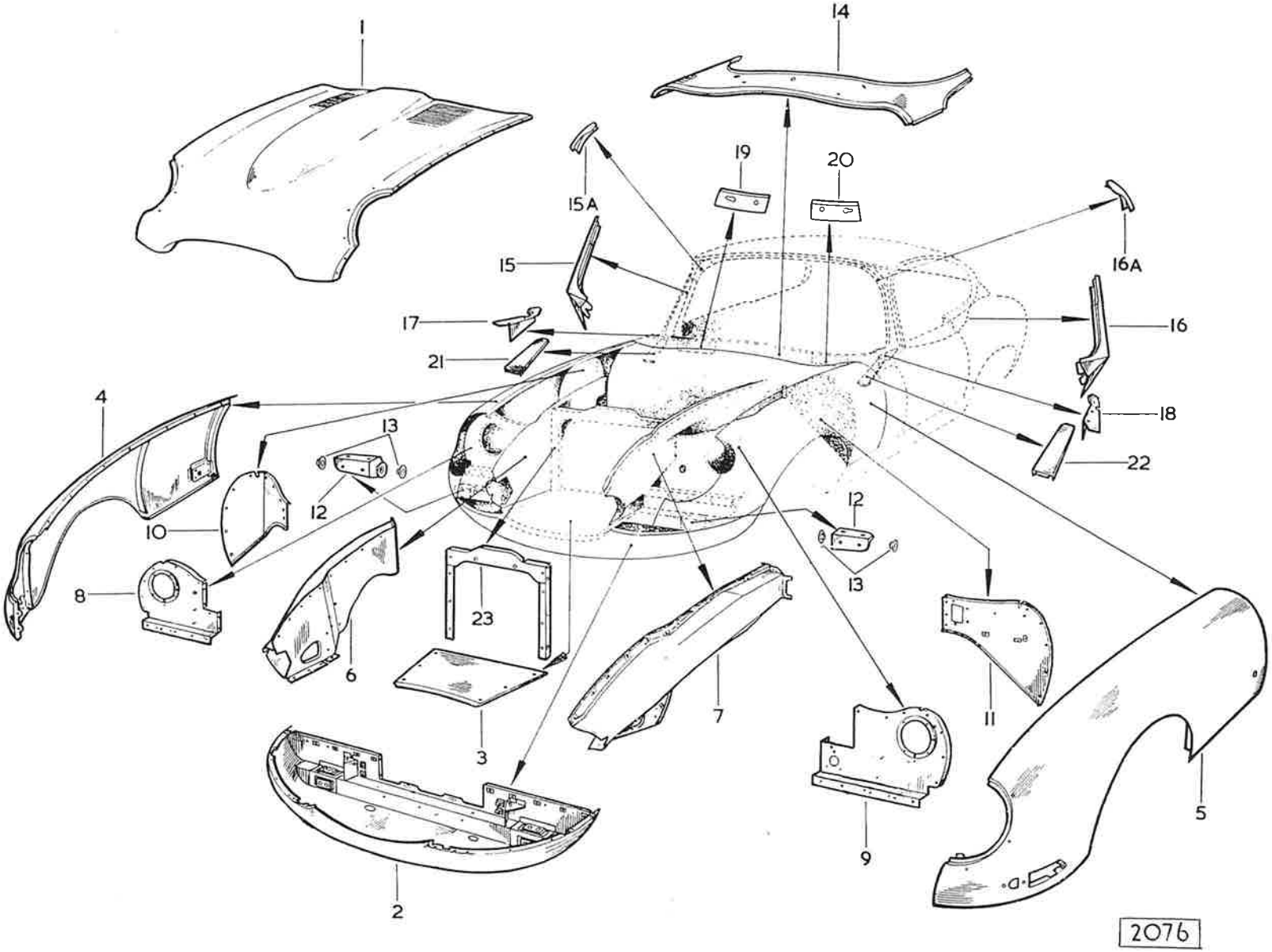

Fig. 8. Exploded view of the bonnet panels

1. Centre section
2. Under panel
3. Lower air duct
4. Side panel—right hand
5. Side panel—left hand
6. Valance—right hand
7. Valance—left hand
8. Front diaphragm—right hand
9. Front diaphragm—left hand
10. Rear diaphragm—right hand
11. Rear diaphragm—left hand
12. Bonnet hinge
13. Nylon bush
14. Scuttle top panel
15. Windscreen pillar—right hand
16. Windscreen pillar—left hand

15a. Reinforcement channel

16a. Reinforcement channel

17. Filler panel
18. Filler panel
19. Corner panel
20. Corner panel
21. Closing panel
22. Closing panel
23. Stoneguard mounting frame

CHROME STRIPS ON BONNET

Removal

The chrome strips along the crown line of the bonnet are secured with clips.

To remove, release the bolts and nuts retaining the centre section to the bonnet side panel, Straighten the prongs of the clips and withdraw the chrome strips.

Refitting

Refitting is the reverse of the removal procedure. Re-bend the clips after re-tightening all the under wing flange bolts.

After re-assembly generously coat all under wing joints with a good quality sealing compound.

FRONT BUMPER

Removal

The front bumper is comprised of two sections (right and left-hand) linked by the motif bar. Removal of either section is identical.

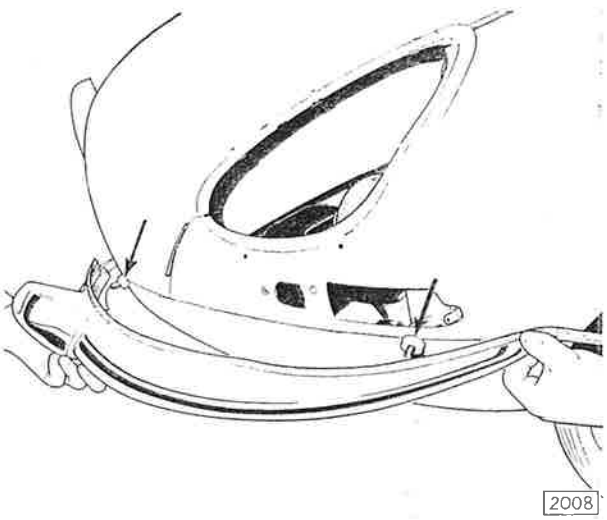

Fig. 9. Removing the left hand front bumper.

To gain access to the bumper fixing bolts it is necessary to remove the glass headlamp cover. Remove the six screws holding the cover retaining the ring to the wing. Remove the ring and rubber seal now exposed.

Remove the glass cover. Remove the three setscrews securing the headlamp duct to the diaphragm panel and withdraw duct forward through nacelle. Remove the setscrew retaining the motif bar to the bumper (See Motif Bar—Removal) and unscrew the two $\frac{3}{8}''$ U.N.F. setscrews, located in the wing nacelle, securing the bumper to the wing.

Detach the bumper and beading.

The curved extension attached to the bumper at its inner end can be removed by withdrawing the two setscrews.

Refitting

Refitting is the reverse of the removal procedure. When refitting ensure that the beading is replaced between the bumper and extension and also between the bumper and the body.

FRONT BUMPER OVER-RIDERS

Removal

Remove the front bumper (See "Front Bumper—Removal").

Remove the nut, plain and lock washer securing the over-rider to the bumper.

Remove the over-rider and beading.

Refitting

When refitting replace the beading between the over-rider and bumper. Refitting is the reverse of the removal procedure.

NEAR BUMPERS

Removal

The rear bumper is comprised of two sections (right-hand and left-hand). Removal varies only in respect of the components it is necessary to remove to gain access to the fixing screws.

Right-hand Bumper

Remove the section of the boot floor over the spare wheel by raising the forward edge until the peg attached to the floor board clears the spring clip. Slide the floor-board forward and remove.

Remove the spare wheel by unscrewing the centre fixing nut.

Remove the side trim casing after unscrewing the three chrome drive screws.

Remove the three bumper retaining setscrews. The forward screw is located within the wheel arch, the remaining two being accessible from the boot interior.

Refitting is the reverse of the removal procedure. When refitting ensure that the rubber beading is replaced, between the bumper and the body.

Left-hand Bumper

Disconnect the positive lead on the battery. Remove the floor board covering spare wheel, and remove the spare wheel. Remove the floor board covering the petrol tank by unscrewing the countersunk screws. Disconnect the two cables from the petrol tank gauge unit.

Remove the cover from the rubber junction block located in the spare wheel compartment and disconnect petrol pump cables.

Disconnect the petrol pipe from the petrol tank and tie up union to boot lid hinge to prevent loss of petrol. Note the two fibre washers. Remove the side trim casing after unscrewing the three chrome drive screws.

Release the clips and remove the petrol filler hose.

Remove the three setscrews from the petrol tank mounting and remove the petrol tank.

Remove the three bumper retaining setscrews. The forward screw is located within the wheel arch, the remaining two being accessible from the boot interior.

Refitting

Refitting is the reverse of the removal procedure. Always ensure that the rubber beading is replaced between the bumper and body. When re-connecting the petrol pipe, note that the two fibre washers are replaced one to each side of the banjo connection.

Reconnect the tank unit and the petrol pump, using wiring diagram as a reference.

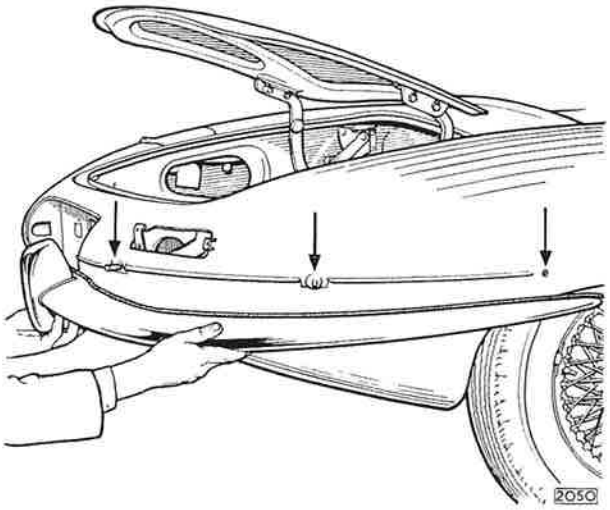

Fig. 10. Removing the right hand rear bumper

REAR BUMPER OVER-RIDERS

Removal

Remove the rear bumper (See "Rear Bumper—Removal").

Remove the nut, plain and lock washer securing the over-rider to the bumper.

Remove the over-rider and beading.

Refitting

When refitting replace the beading between the over-rider and the bumper. Refitting is the reverse of the removal procedure.

LUGGAGE COMPARTMENT LID AND HINGES

Removal

Raise the luggage compartment lid and on the Fixed head coupe retain in position by lowering the stay.

The lid on the Open 2-seater is retained in the open position by the action of helper springs.

Mark the position of the hinges on the lid. Remove the four setscrews, plain and lock washers and remove the lid.

Mark the position of the hinges on the body and remove the four setscrews, nuts and lock washers securing the hinge to the body.

Refitting

Refitting is the reverse of the removal procedure.

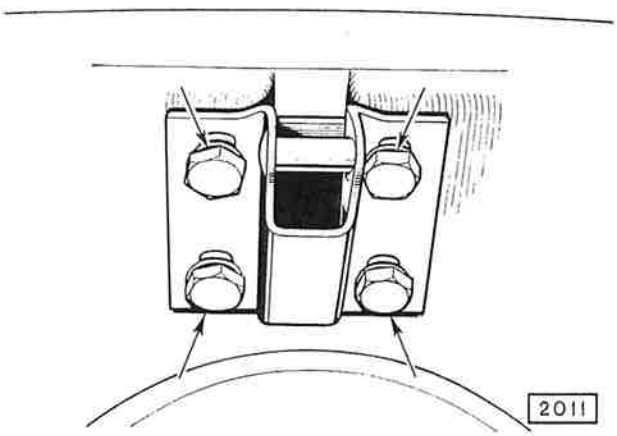

Fig. 11. Location of the screws for adjustment of the luggage compartment lid striker (Open 2-seater)

Luggage Compartment Lock Adjustment—Open 2-seater

Slacken the four setscrews securing the luggage compartment lid striker to the luggage compartment lid (see Fig 11). Move the striker in the elongated holes until the lock operates correctly and does not rattle. Tighten the retaining screws.

Luggage Compartment Lock Adjustment—Fixed Head Coupe

Slacken the two cross-headed screws in the lock striker and the two nuts securing the striker to the lid.

Move the striker in the elongated holes until the lock and the safety catch operate correctly and do not rattle. Tighten the retaining setscrews.

Further adjustment is provided if required by the four slotted holes in the lock attached to the body panel.

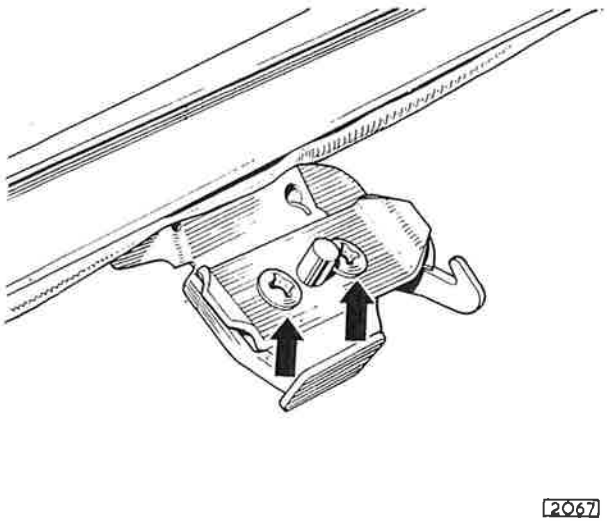

Fig. 12. Location of the screws for adjustment of the luggage compartment lid striker (Fixed Head Coupe)

Fig. 13. Showing the adjustment for the luggage compartment lid striker bracket (Fixed Head Coupe).

PETROL FILLER LID

Removal

Remove the return spring. Unscrew the two setscrews and washers securing the lid and hinge to the inner wall of the petrol filler cap compartment.

Remove the two setscrews and washers securing the lid to the hinge.

Refitting

Refitting is the reverse of the removal procedure.

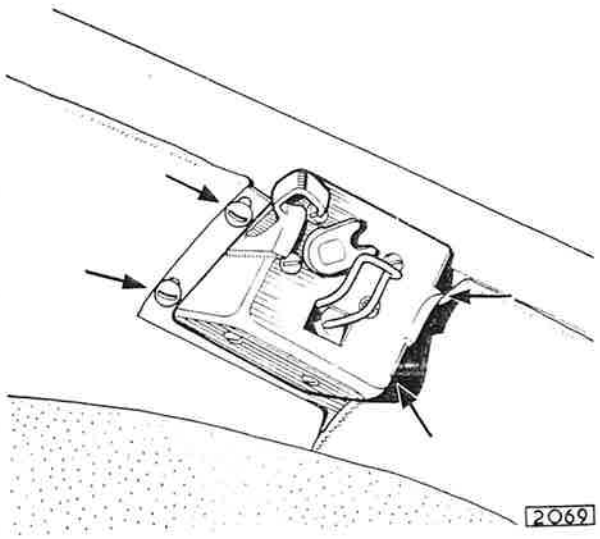

Fig. 14. The adjustment screws for the luggage compartment lock (Fixed Head Coupe).

WINDSCREEN

Removal—Open 2-seater

On Open 2-seater models it is necessary to detach the windscreen stay from the bracket attached centrally to the top screen frame by withdrawing the two slotted setscrews.

Remove the two chrome screen pillar cappings from the screen pillars by extracting the two cross-headed screws from each capping.

Note: The two screws have different heads and must be replaced in the same holes when refitting the screen.

Remove the screen pillar trim welts by withdrawing away from the flange on the pillars. The welt is retained in position by spring clips.

Using a No. 35 drill remove the two "Pop" rivets now exposed, retaining the chrome finisher to each screen pillar. Prise away the finisher from the screen rubber.

Prise off the chrome finisher from the bottom of the windscreen rubber. Extract one end of the screen rubber insert and withdraw completely. Run a suitable thin bladed tool around the windscreen to break the seal between the rubber and the windscreen aperture flange.

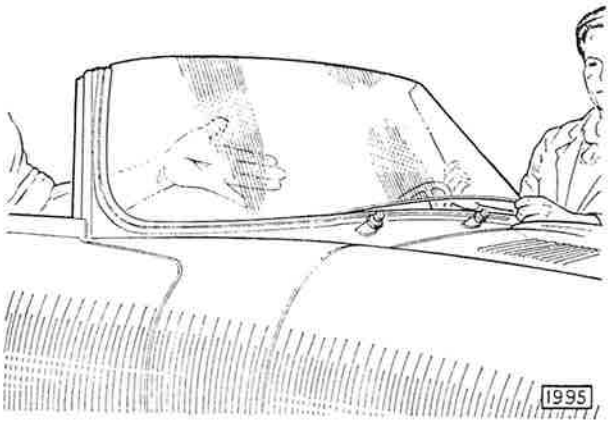

Fig. 15. Removing the windscreen.

Strike the glass with the flat of the hand from the inside of the car, starting in one corner and working towards the bottom.

Repeat this process around the complete windscreen.

Withdraw the screen.

Remove the windscreen top frame by inserting a thin flat bladed tool between the sealer and the glass to break the seal and gently prise away the frame. Do not use undue force when removing the frame.

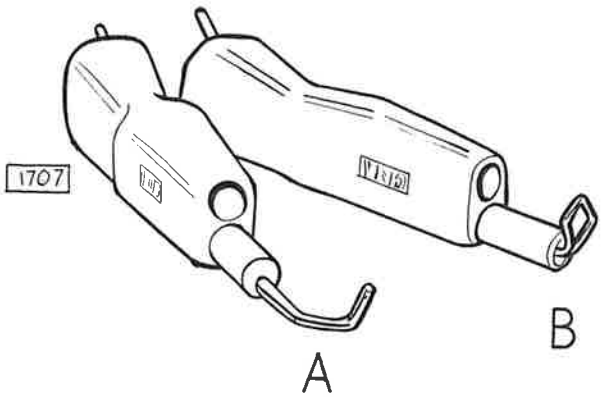

Fig. 16. The two special tools used when refitting the windscreen.

Refitting

Remove the old sealer from the windscreen flange. Examine the screen rubber for cuts.

If the windscreen was not broken by a projectile the windscreen aperture flange should be examined for a bump in the metal. If this is found the bump should be filed away otherwise the glass may break again.

The rubber should be attached to the windscreen aperture with the flat side of the rubber towards the rear.

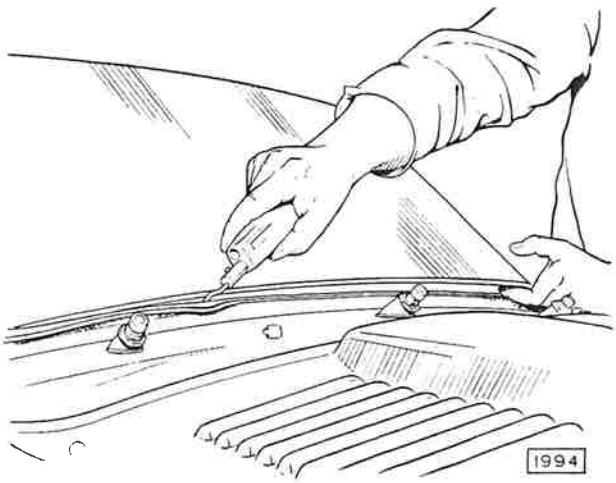

Fig. 17. Using the special tool ("A") Fig. 16, for lifting the windscreen rubber over the glass

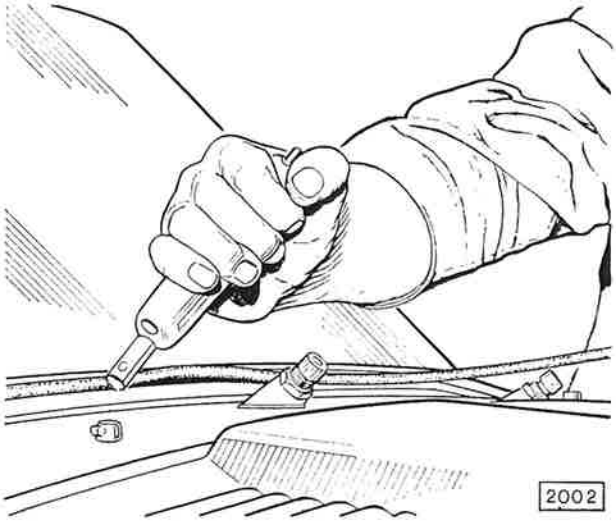

Fig. 18. Using the special tool ("B") Fig. 16, for inserting the rubber sealing strip in the windscreen sealing rubber

Using the special tool (A, Fig. 16) insert the screen into the rubber along the bottom edge first. DO NOT fit one end and then try to fit the other. Using the special tool (B, Fig. 16) insert the rubber sealing strip with the rounded wide edge to the outside.

Using a pressure gun filled with a sealing compound and fitted with a copper nozzle (so that the glass will not be scratched) apply the nozzle of the gun between the metal body flange and the rubber. Repeat the operation between the glass and the rubber. Remove excess sealing compound with a cloth soaked in white spirit. DO NOT USE THINNERS as this will damage the paintwork.

Fit the chrome strip on top of the windscreen rubber and bend to suit contour if necessary. Coat the inside of the strip with a layer of Bostik 1251 and allow to become tacky.

Place the chrome strip on the rubber over the sealing strip and with the special tool (A) lip the rubber over the chrome finisher.

Refit the windscreen top frame. Always use a new length of sealing strip and do not apply undue force when refitting. If difficulty is experienced when fitting frame lubricate sealing strip and glass with a liquid soap solution.

Coat the inside face of the screen pillar finisher with Bostik 1251 and allow to become tacky.

Note: It is only necessary to apply the Bostik to that portion of the finisher which comes into contact with the screen rubber.

Place the finisher on the rubber over the sealing strip and with the special tool (A) lip the rubber over the finisher. Secure the finisher to the screen pillar with two "Pop" rivets inserted in the original holes.

Refit the chrome screen pillar cappings to the screen pillars.

It is essential that the flat countersunk screw is fitted to the inside face of the screen pillar capping and the raised screw is fitted to the top face.

Failure to ensure this will prevent the hood from fitting correctly to the screen frame.

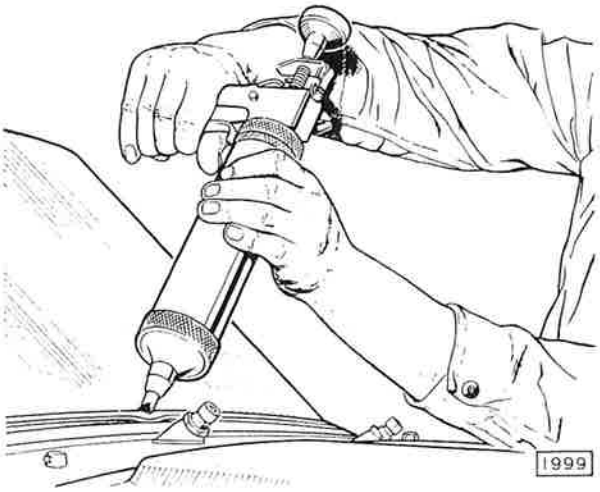

Fig. 19. Using a gun to inject sealing compound between the surround and the glass

Removal—Fixed Head Coupe

Prise off the two screen pillar chrome finishers from the windscreen rubber and repeat with the upper and lower finishers. Extract one end of the rubber insert and withdraw completely.

Run a suitable thin bladed tool around the windscreen to break the seal between the rubber and the windscreen aperture flange.

Strike the glass with the flat of the hand from inside the car, starting in one corner and working towards the bottom.

Repeat this process around the complete windscreen.

Withdraw the windscreen.

Refitting

Remove the old sealer from the windscreen flange.

The procedure for refitting and re-sealing the glass is similar to the instructions given for the Open 2-seater (page 17).

Fit the upper chrome strip on top of the windscreen rubber and bend to suit contour if necessary. Coat the inside of the strip with Bostik 1251 and allow to become tacky. Place the chrome strip on the rubber over the rubber sealing strip and with a hook (A, Fig. 16) lip the rubber over the finisher. Repeat the operation with the lower chrome strip. Refit the two screen pillar chrome finishers. Coat the inside of the finisher with Bostik and lip the rubber over using the same tool. The screen pillar finishers will overlap the upper and lower finishers at the two ends.

REAR WINDOW GLASS

Removal—Fixed Head Coupe

Prise away the chrome finisher strip from the outside of the rubber.

Extract one end of the rubber insert and withdraw completely.

Run a suitable thin bladed tool around the glass to break the seal between the rubber and the glass aperture flange.

Strike the glass with the flat of the hand from inside the car, starting in one corner and working towards the bottom.

Repeat this process around the complete glass.

Withdraw the glass.

Refitting

Remove the old sealer from the glass flange.

The procedure for refitting and re-sealing of the rear glass is similar to the instructions given for fitting the windscreen (page 17).

Fit the chrome strip on top of the rubber and bend to suit contour if necessary. Coat the inside of the strip with Bostik 4251 and allow to become tacky.

Place the strip on the rubber and using tool (A, Fig. 16) lip the rubber over the finisher.

Removal—Detachable Hard Top

The rear light on the detachable hard top is made from a clear plastic material which will not break under ordinary circumstances. If however, the rear light becomes badly scratched it may be renewed by proceeding as for windscreen removal and refitting on page 17.

Care must be taken when removing the excess sealing compound that the rear light is not scratched. Always use a very soft cloth soaked in white spirit. DO NOT use thinners.

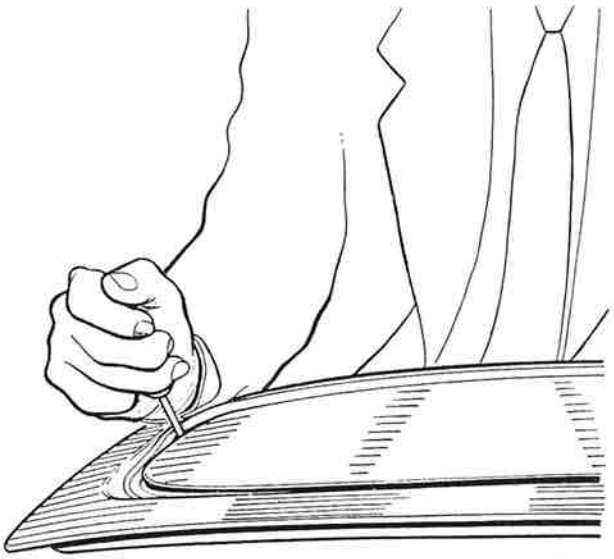

Fig. 20. Removal of the rear glass (Fixed Head Coupe)

DOORS AND HINGES

Removal

Mark the position of the hinges on the door hinge pillar.

Remove the eight bolts securing the hinges to the pillar.

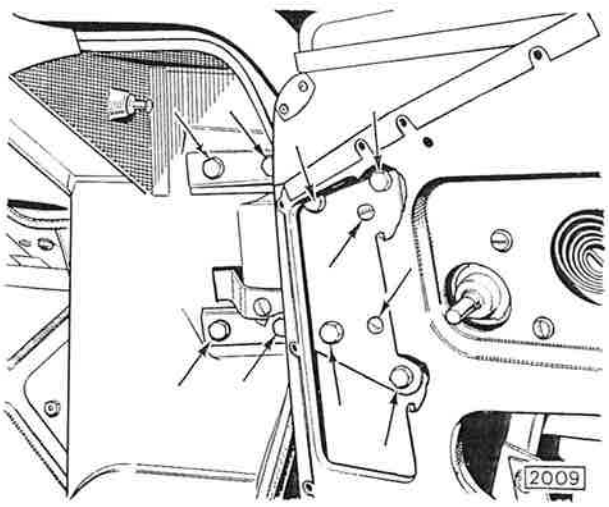

Fig. 21. Location of the screws securing the door hinges

To remove the hinges from the door remove the door trim casings (see "Door Trim Casings").

Remove the four setscrews and lock washers and the two drive screws attaching the hinges to the door panel.

Refitting

Refitting is the reverse of the removal procedure.

DOOR TRIM CASINGS

Removal

Remove the door handle by inserting a screwdriver between the handle and the spring cap and press the cap inwards (see Fig. 22). This will expose the retaining pin which should be tapped out. The handle, spring Clip and escutcheon can now be removed.

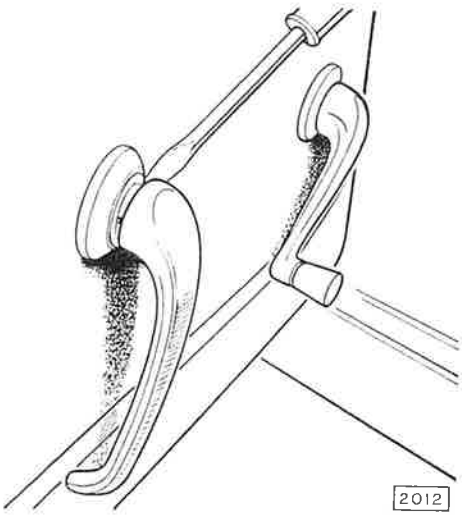

Fig. 22. Location of the interior door lock handle retaining pin.

Remove the window regulator handle which is secured in the same way as the door handle.

Remove the top chrome strip from the door casing by inserting a screwdriver under the strip at the door hinge end and levering strip away from its retaining spring clip. Repeat for the remaining four spring clips. Remove the chrome strip. Detach the spring clips by removing the five drive screws. Insert a thin bladed screwdriver between the casing and the door frame and prise off the casing which is secured by twenty-one clips.

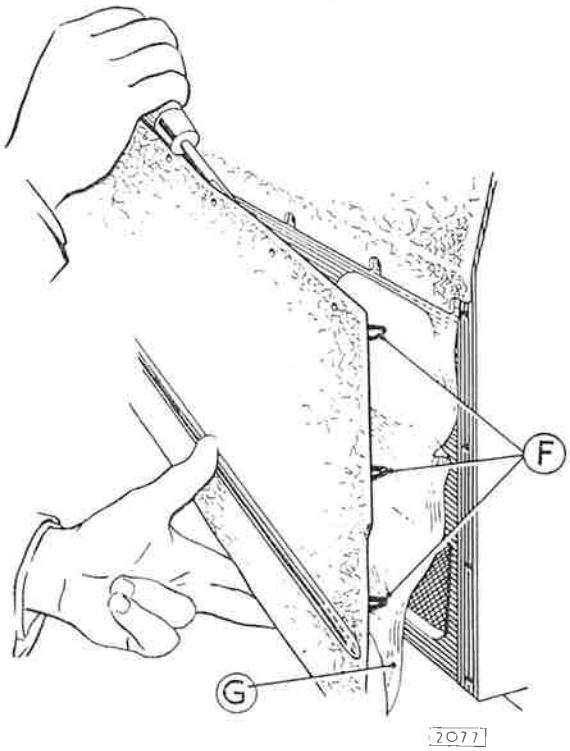

Fig. 23. Removing the door trim casing F—spring clips. G—plastic cover.

Refitting

Refitting is the reverse of the removal procedure.

DOOR WINDOW GLASS AND FRAME

Removal—Door Window Glass

Remove the door trim casing as previously described.

Pull off the clear plastic sheet which is stuck to the door frame with upholstery solution.

Remove the six screws and washers retaining the closing strip to the top of the door frame. Wind the window down until the roller on the window regulator is accessible through the lower aperture in the door inner panel, and unscrew the regulator stop pin located in the channel, Fig. 24.

Raise the window until the regulator channel is above the door panel. Ease the regulator slide from the channel and withdraw the glass.

Removal—Door Window Frame

Remove the door window glass as described previously. Remove the three drive screws securing the

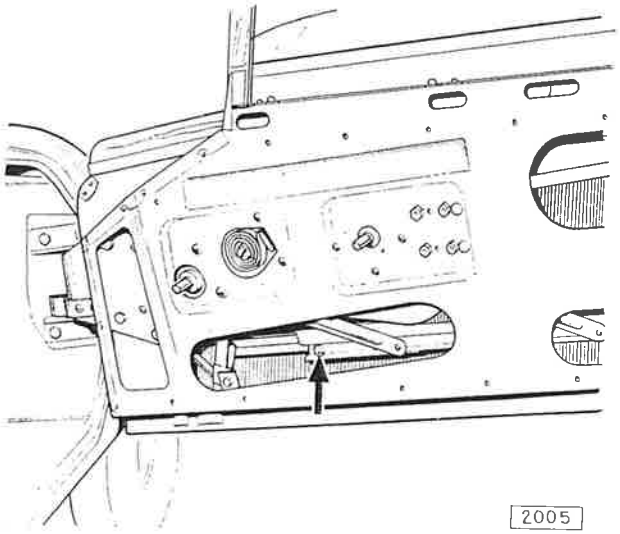

Fig. 24. Location of the window regulator stop pin.

frame to the top of the door panel. Note the location of the spacing shims fitted between the frame and the door panel.

Remove the two nuts and washers securing the glass frame to the two brackets located on the door lower panel.

Withdraw the frame.

Refitting

The refitting of the door window glass and frame is the reverse of the removal procedure.

WINDOW REGULATOR

Removal

Remove the door casing, glass and frame as described on page 20.

Remove the four nuts and lock washers securing the regulator to the door frame.

Remove the four screws and lock washers securing the window regulator spring to the door frame.

Lower the regulator mechanism within the door frame and withdraw through the aperture at the bottom of the door panel.

Refitting

Refitting is the reverse of the removal procedure.

DOOR WINDOW OUTER SEAL

Removal

Remove the door casing and glass as described on page 20.

Remove the five screws and outer seal retaining strip securing seal to the door panel. Detach outer seal.

Removal of the chromium door finisher—Open 2-Seater

The chromium finisher fitted to the top of the door panel can be removed after the removal of the outer seal by extracting the two screws, located in the front and rear faces of the finisher.

Refitting

Refitting is the reverse of the removal procedure.

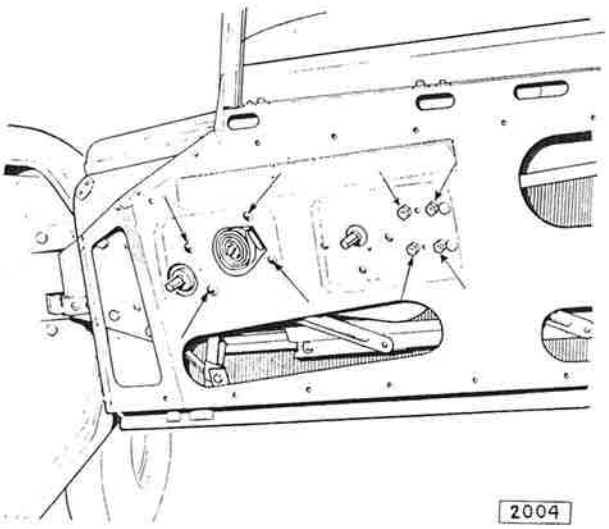

Fig. 25. Location of the nuts and screws securing the window regulator to the door panel.

SEATS AND RUNNERS

Removal

Remove the cushions from the front seats. Remove the four nuts and washers securing each seat pan to the runners and lift off the seat.

If it is required to remove the seat runners slide the runners rearwards and remove the two setscrews securing the front of the runners to the body floor.

Slide the runners forward and remove the two setscrews retaining the rear of the runners to the floor.

Refitting

Refitting is the reverse of the removal procedure.

NO DRAUGHT VENTILATOR (Fixed Head Coupe)

Removal

Remove the two screws securing the N.D.V. catch arm bracket to the body, accessible from inside the car.

Open the N.D.V.

Remove the five screws securing the N.D.V. light hinge to the frame post.

Refitting

Refitting is the reverse of the removal procedure.

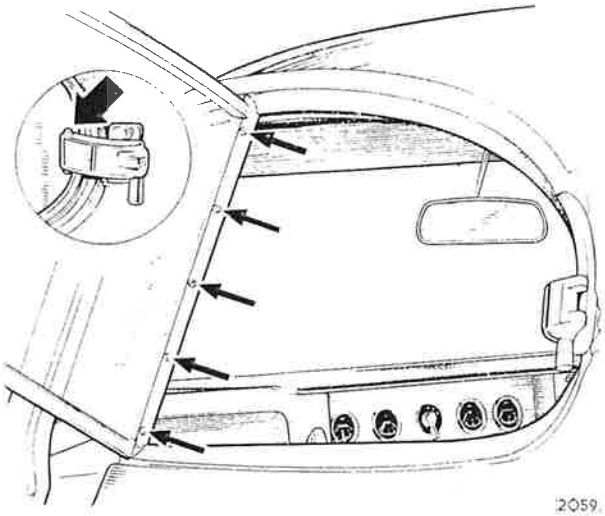

Fig. 26. The screws retaining the N.D.V. hinge. Inset shows the catch retaining pin

REMOVAL AND REPLACEMENT OF DOOR LOCK MECHANISM

Remove the door trim casing as described on page 20.

Detaching Remote Control Connecting Link

The lock and remote control units are joined by a connecting link which can be detached to enable either unit to be moved independently.

The link is secured to the dowel (H, Fig. 30) on the lock lever by a circlip.

Removing the Lock Unit

First release the spring (I, Fig. 30) holding the bottom of the outside handle extendable link (J) to the dowel (K) on the lock intermediate lever. This

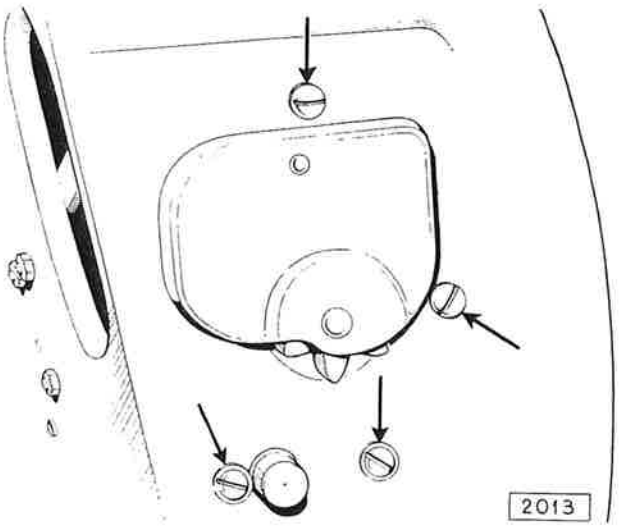

Fig. 27. Location of the screws retaining the door lock in position

is accessible through the aperture in the inner door panel. The lock is detached from the door by removing the four screws (L). To take the lock out of the door it must be pressed inwards and downwards slightly and passed around the window channel which is immediately behind it.

Removing Outside Push Button Handle

This is retained by two nuts (M, Fig. 30).

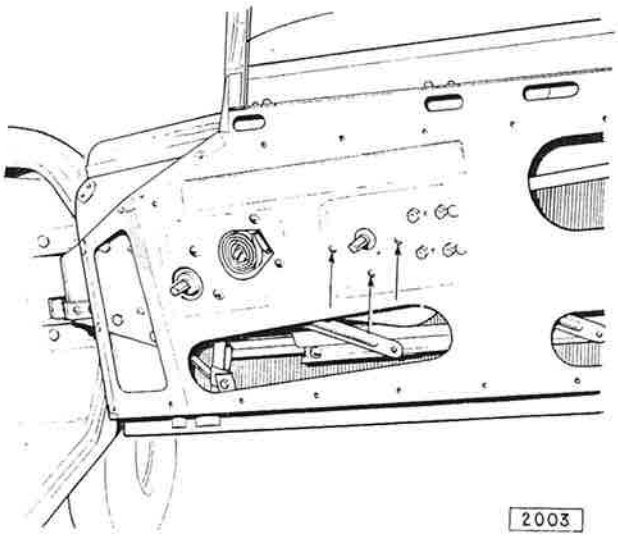

Fig. 28. Location of the remote control retaining screws

Removing the Remote Control Unit

Remove the three screws (N, Fig. 30) and take the remote control with its connecting link out through the aperture in the inner door panel.

Removing the Striker Unit

Do not disturb the three fixing screws (O) unless it is necessary to make adjustments or fit a new replacement,

Fitting the Lock Unit

The lock unit is inserted through the aperture in the inner door panel, passed around the window channel and lifted slightly until it projects through its cut-out in the door shut face. The four securing screws (L, Fig. 30) (with shakeproof washers) should then be fitted and tightened.

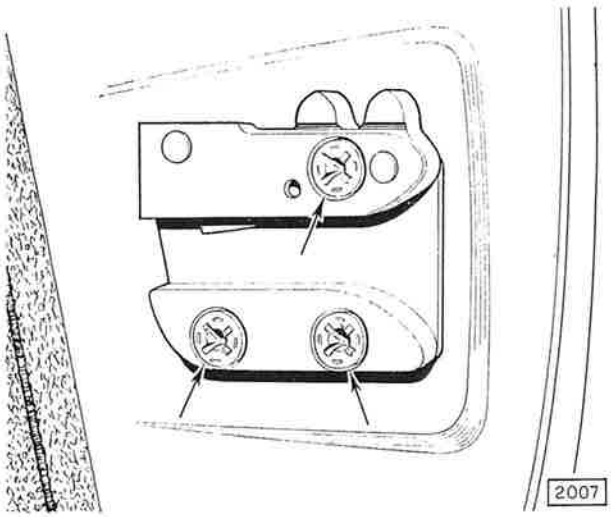

Fig. 29. Location of the door striker plate securing screws

Locating the Remote Control Unit

The remote control *must* be fitted in the locked position. For this reason it is supplied pinned in the locked position as shown at (P, Fig. 30).

Insert the remote control unit through the aperture in the inner door panel and position it so that its spindle and pin (P) project through their respective holes in the panel.

At this stage *loosely* fit the three securing screws (N) (with shakeproof washers).

Attaching the Remote Control Connecting Link

The connecting link is fitted to the dowel (H, Fig. 30) on the lock operating lever and retained by a circlip. A waved washer is interposed between the lever and link and a plain washer is fitted under the circlip.

Aligning the Remote Control Unit

Move the remote control *towards* the lock until the operating lever is in *contact* with the lock case as illustrated and tighten the three securing screws (N, Fig. 30).

Important: In certain cases it may be necessary to elongate the four holes in the inner door panel to achieve this condition.

Fitting the Outside Push Button Handle

The plunger housings on the outside handles are stamped LH or RH (left hand or right hand). The appropriate handle should be held in position on the door panel and the clearance between the push button plunger (Q, Fig. 30) and the lock contactor (R) checked through the aperture in the inner door panel. Do not check the clearance by depressing the push button as this may be deceptive. The clearance should be $\frac{1}{32}''$

However, before making any adjustments turn the operating lever (S) to the unlocked position so that depression of the push button moves the plunger through its housing. Only in this position, release the locknut (T), screw the plunger bolt (Q) in or out as required and re-tighten the locknut *before* releasing the push button.

Before finally fitting the handle attach the extendable link (J) to the operating lever (S) and retain with a circlip.

The operating lever should then be turned to the locked position, i.e. until the location holes in the operating lever and plunger housing are in line. To maintain the operating lever in this position insert a short length of $\frac{1}{8}''$ diameter rod (U) (suitably cranked for easy removal after assembly) through the locating holes illustrated. Manoeuvre the rod and the extendable link (J) through the handle aperture so that they hang down inside the door, then the handle fixing nuts (M) (with plain and shakeproof washers) can be fitted and tightened.

Connecting Push Button Mechanism to the Lock Nut

Ensure that the remote control cam is pinned (P, Fig. 30) in the locked position. It will be observed that one of the three holes in the bottom of the extendable link (J) can be aligned with the dowel (K) on the lock intermediate lever. The extendable link is simply pressed

on, being automatically retained by the spring (I). Finally withdraw the cranked rod (U) and the pin (P).

Fitting and Adjusting Strike Unit

Attach the striker loosely by means of its three screws (O, Fig. 30) which pass through the door pillar into an adjustable tapping plate.

Positioning is carried out by a process of trial and error until the door can be closed easily but without rattling and no lifting or dropping of the door is apparent. Ensure that the securing screws are finally tightened.

Important: The strike must be retained in the horizontal plane relative to the door axis.

Master Check for Correct Alignment

Fit an inside handle *vertically downwards* on the remote control spindle. Turn the handle *forward* into the locked position. It will automatically return to the central position when released. Close the door while holding the push button in the *fully depressed* position. The door will remain locked although the push button may be freely depressed.

Insert the key in the slot in the push button and turn in the appropriate direction. Push button control will then be restored and the door can be opened.

After turning the key automatically return to the *vertical* position when it can be removed.

Important: The key must be removed from the locking device before closing a door in the locked position.

Lubrication

Before fitting the door casing ensure that any moving parts are adequately greased, using a protective grease such as "Astrolan".

After assembly introduce a few drops of thin machine oil into the oil hole (V, Fig. 30) provided on top of each lock case and into the private lock key slots. These items should be lubricated once a month.

Important: The private lock cylinders must not under any circumstances be lubricated with grease.

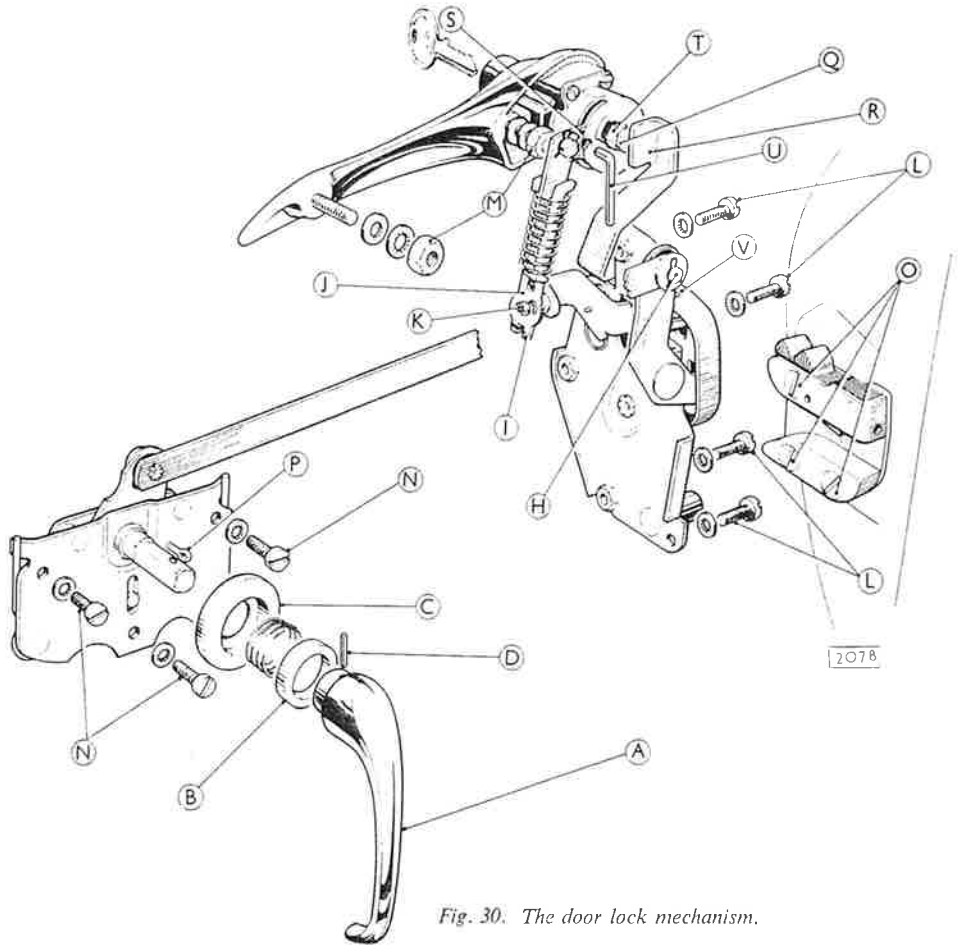

Fig. 30. The door lock mechanism.

ACCIDENTAL DAMAGE

The repair of the stressed steel body of monocoque construction together with the front and rear sub-frame assemblies varies in some degree depending on the extent of the damage to that of separate body and chassis construction or integral construction bodies.

Superficial damage can be affected in a similar manner to that employed on "all steel" bodies, which is familiar to all body repairers.

Repairs to rectify extensive damage affecting the front and rear sub-assemblies and also to the body must be carried out so that when the repair is completed the main mounting points for the engine and front and rear suspension units are in correct relationship to each other.

Important

It is most important, when accidental damage has been sustained at the front frame, that the appropriate sub-frame assembly should be replaced. NO ATTEMPT SHOULD BE MADE TO WELD OR BRAZE REPLACEMENT TUBES INTO THESE ASSEMBLIES NOR SHOULD HEAT IN ANY FORM BE APPLIED IN AN EFFORT TO STRAIGHTEN THEM.

CHECKING THE BODY AND FRONT FRAME FOR ALIGNMENT

Checking for distortion in the horizontal plane

The plan view of the body (see Fig. 1) provides the important dimensions for checking distortion in the body and front-frame. These dimensions can be measured actually on the underside of the body or by dropping perpendiculars from the points indicated by means of a plumb bob onto a clean level floor. If the latter method is used, the area below each point should be chalked over and the position at which the plumb bob touches the floor marked with a pencilled cross.

Checking for distortion in the vertical plane

For checking the body and sub-frames for distortion in the vertical plane, the side elevation gives the details of the important dimensions from a datum line

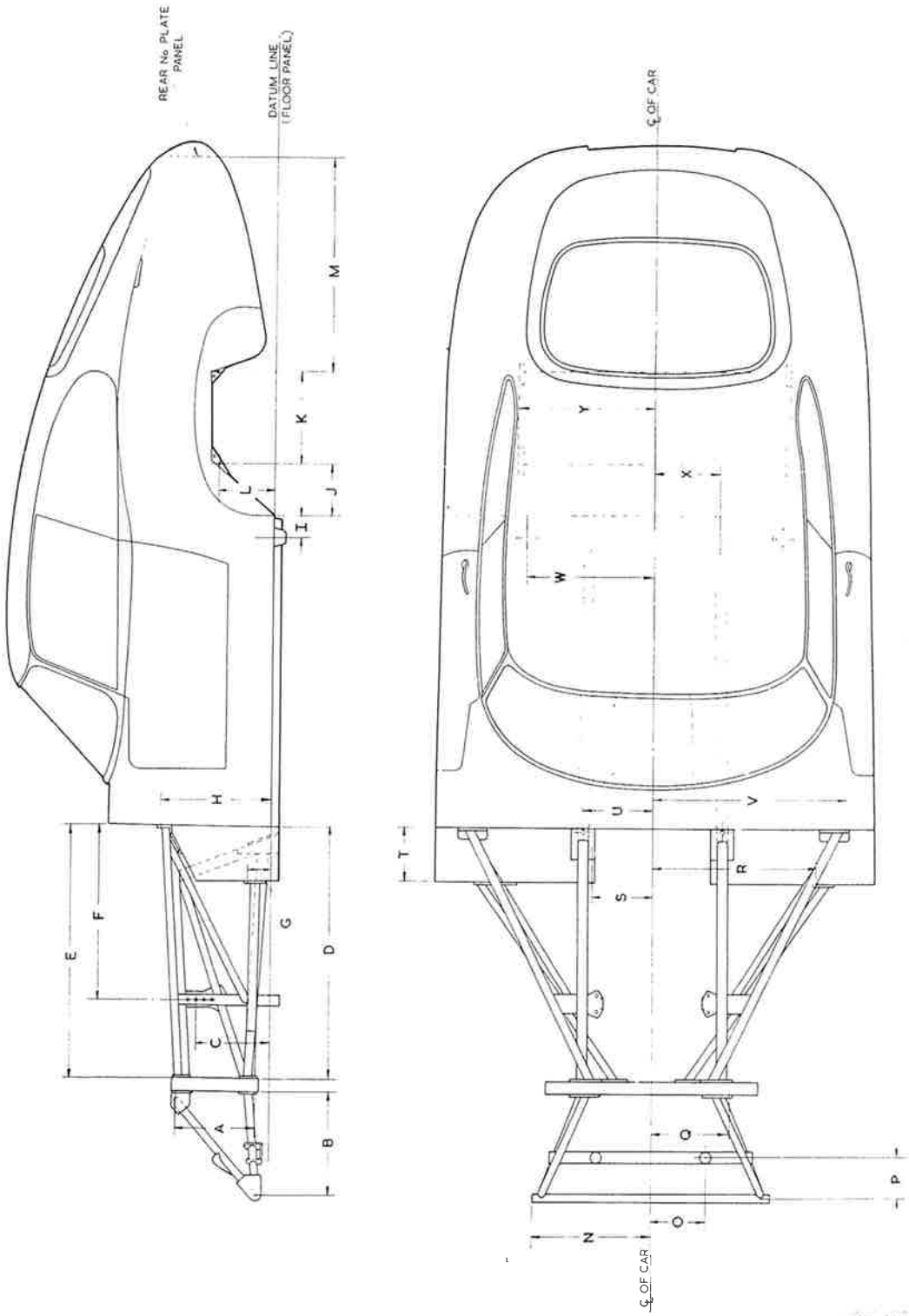

Fig. 1. Body and front frame alignment diagram

KEY TO ALIGNMENT DIAGRAM

Symbol	Measurement taken from	Dimension	
A	Upper hole of top mounting flange to lower hole of lower mounting flange on front sub frame.	$10\frac{3}{4}''$	27·31 cm.
B	Centre line front tube to rear mounting flange front sub frame	$14\frac{5}{32}''$	35·96 cm.
C	Second from top hole on engine mounting post to datum line	$10\frac{1}{8}''$	25·72 cm.
D	Lower rear face of front cross member to front bulkhead face	$35\frac{25}{32}''$	90·88 cm.
E	Upper rear face of front cross member to front bulkhead face	$35\frac{3}{4}''$	90·81 cm.
F	Centre line of holes on engine mounting post to front bulkhead face	$25\frac{1}{8}''$	63·82 cm.
G	Top hole in outer side member to datum line	$3\frac{1}{8}''$	7·94 cm.
H	Top hole in upper outrigger flange to datum line	$15\frac{1}{8}''$	38·42 cm.
I	Centre of radius arm mounting post to front face of rear wheel aperture	$2\frac{15}{16}''$	7·46 cm.
J	Centre line of front lower mounting hole to front face of rear wheel aperture	$9\frac{23}{32}''$	24·69 cm.
K	Centre line of front lower mounting hole to centre line of rear mounting hole	$10\frac{37}{64}''$	26·87 cm.
L	Centre line of lower mounting hole to datum line	$8\frac{7}{64}''$	20·60 cm.
M	Centre line of rear lower mounting hole to rear number plate panel	$31\frac{43}{64}''$	80·45 cm.
N	Outer face of front sub frame front tube to centre line of car	$16\frac{15}{16}''$	43·02 cm.
O	Centre line of radiator mounting hole to centre line of car	$8\frac{1}{4}''$	20·95 cm.
P	Centre line of front frame front tube to centre line of radiator mounting hole	$5\frac{3}{4}''$	14·61 cm.
Q	Top outer hole of front sub frame upper mounting flange to centre line of car	$10\frac{11}{16}''$	27·15 cm.
R	Inner hole of outer side member mounting flange to centre line of car	$22\frac{7}{8}''$	58·10 cm.

KEY TO ALIGNMENT DIAGRAM (continued)

Symbol	Measurement taken from	Dimension	
S	Inner hole of top side member mounting flange to centre line of car	$8\frac{5}{8}''$	21·91 cm.
T	Rear mounting flange face of outer side member to front bulk-head face	8″	20·32 cm.
U	Centre line of hole in front of body underframe side members to centre line of car	$9\frac{25}{32}''$	24·84 cm.
V	Outer hole of outrigger mounting bracket to centre line of car	$26\frac{5}{8}''$	67·63 cm.
W	Centre line of radius arm mounting post to centre line of car	18″	45·72 cm.
X	Centre line of hole in rear of body underframe side members to centre line of car	$9\frac{1}{8}''$	23·18 cm.
Y	Outside face of rear suspension mounting points to centre line of car	$18\frac{9}{16}''$	47·15 cm.

REPLACEMENT BODY PANELS

Where the existing panels or members are badly damaged and it is not possible to effect a satisfactory repair in position, the affected panels will have to be cut out and replacement panels welded in their place.

It will frequently be found advantageous to use only a part of a given panel so that the welded joint can be made in a more accessible position. Great care must, of course, be taken when cutting the mating portions of the panel to ensure that perfect matching is obtained.

Any unused portions of replacement panels should be retained as it will often be found that they can be used for some future repair job.

Where a replacement panel to be fitted forms part of an aperture such as for a door or the luggage boot lid, an undamaged door or lid should be temporarily hinged in position and used as a template to assist location while a replacement panel is clamped and welded in position.

Before any dismantling takes place after accidental damage a check of the body alignment should be carried out.

THE FRONT FRAME

The front frame assembly is fabricated from square section steel tubing and is bolted to the main body structure.

To facilitate repair and reduce the cost of replacement in the event of damage, the frame is a built up unit consisting of two triangular side members and a deep front cross member.

Disconnect the torsion bars before removing the sub frame from the body. (See Section J "Front Suspension"). The plan and side elevation views given on page 4 provide all the important dimensions necessary for checking both the side-members and the front cross-member.

WELDING METHODS

The following are the principal methods of welding used in the assembly of the body and underframe panels. The instructions given below for breaking the different types of welds should be adhered to when removing a damaged panel as this will facilitate the assembly of the new panel.

Spot Welding

This type of welding is used for the joining of two or more overlapping panels and consists of passing electric current of high amperage through the panels by means of two copper electrodes.

This results in complete fusion of the metal between the electrodes forming a "spot" weld which is frequently repeated along the length of the panels to be joined. Spot welds can easily be recognised by slight indentation of the metal.

Lap joints on the outer body panels which are spot welded together are usually lead filled and in this case it will be necessary to direct the flame of an oxy-acetylene torch on to the lead so that the filling can be melted and wiped off by means of a piece of cloth.

Breaking Spot Welds

Spot welds cannot be broken satisfactorily other than by drilling; any attempt to separate the panels by using a chisel will result in the tearing of the metal in the vicinity of the spot welds.

Use a $\frac{3}{16}$" (4·7 mm.) diameter drill and carefully drill out each weld. There is no necessity to drill completely through both panels; if the "spot" is drilled out of one of the panels the weld can be completely broken by inserting a sharp thin chisel between the two panels and tapping lightly with a hammer.

Where possible, drill the spot welds completely out of the panel that is to be left in position on the body. This will allow the new panel to be joined to the mating panel on the body by gas welding through the holes in the overlapping flange. (This does not apply if spot welding equipment is available).

If this is not possible, and the holes have to be drilled out in the damaged panel, new holes can be drilled in the replacement panel and the same type of weld effected.

Gas Welding

This type of welding is carried out by means of oxy-acetylene equipment and is used for the joining of overlapping panels or the butt welding of the edges of two panels.

Breaking Gas Welds

Gas welds may be broken either by means of a sharp chisel or by cutting through with a hacksaw; welding can be removed by grinding with a pointed emery wheel.

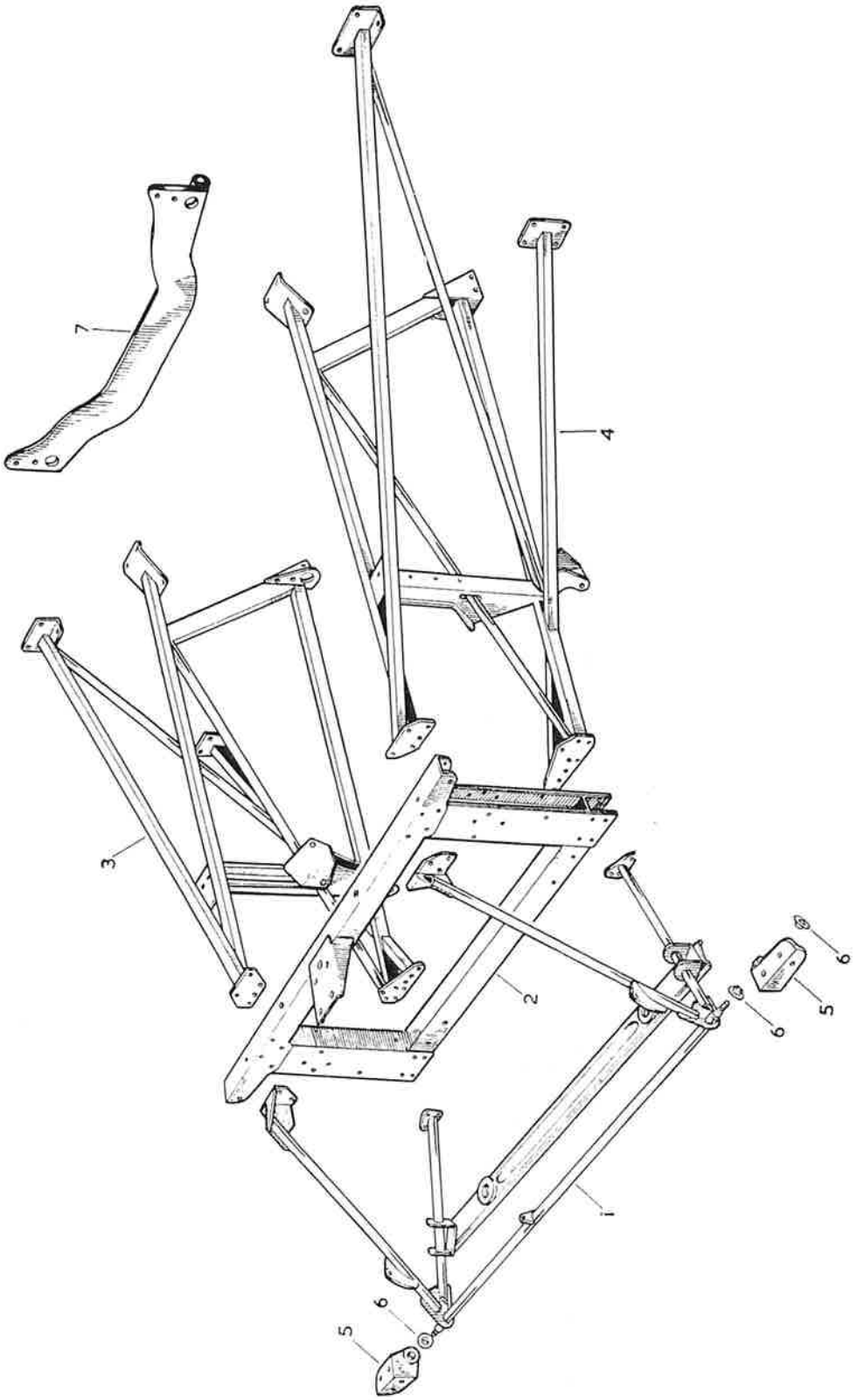

Fig. 2. Exploded view of the front frame assembly

1. Front sub frame assembly
2. Front cross member assembly
3. Right-hand side member assembly
4. Left-hand side member assembly
5. Bonnet hinge bracket
6. Nylon bush
7. Torsion bar anchor bracket reaction plate

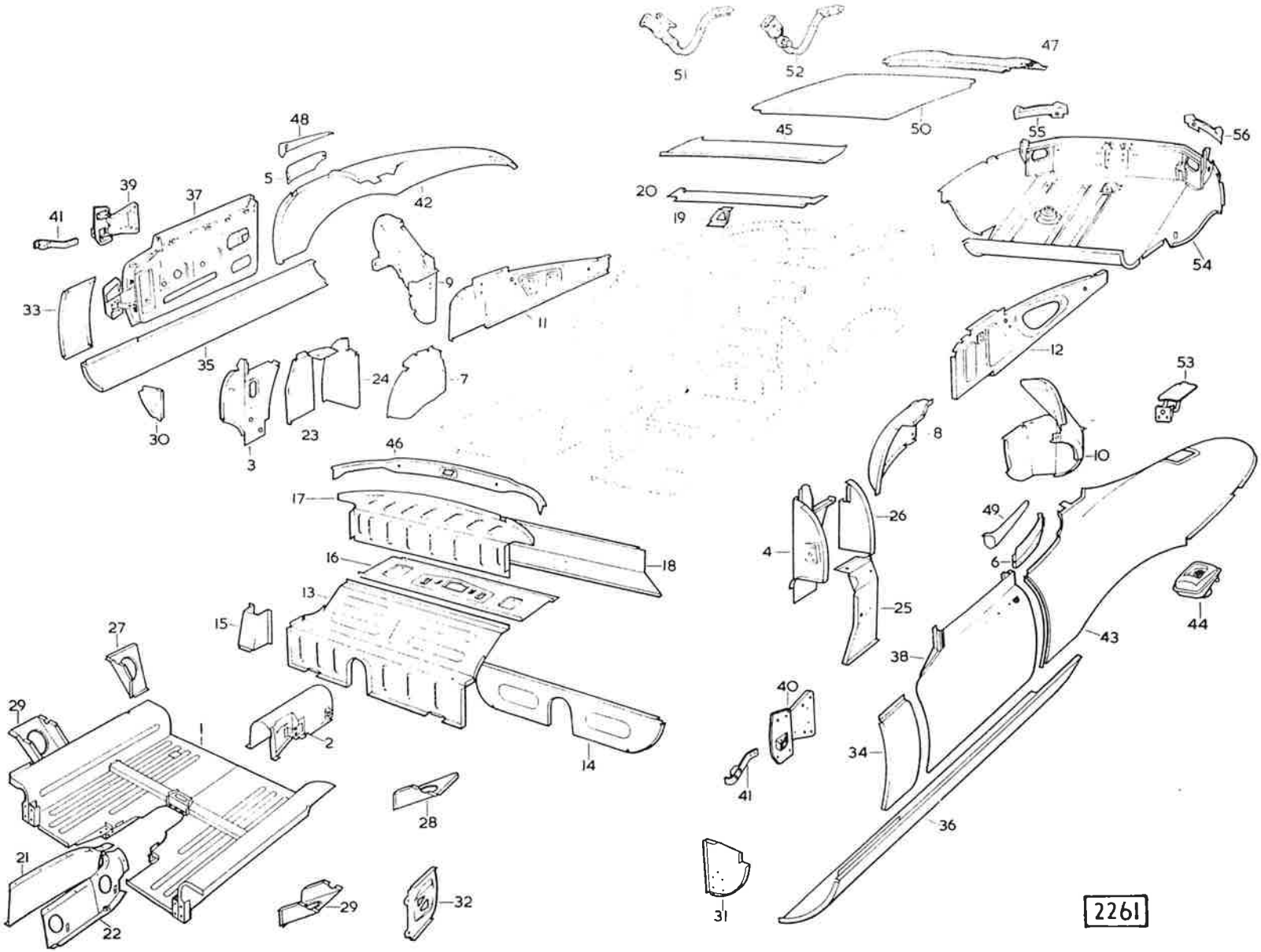

Fig. 3. Body panels (Open 2 seater)

1. Floor assembly
2. Tunnel assembly
3. Shut pillar (right-hand side)
4. Shut pillar (left-hand side)
5. Support panel (right-hand rear quarter)
6. Support panel (left-hand rear quarter)
7. Wheel arch panel (right-hand forward)
8. Wheel arch panel (left-hand forward)
9. Wheel arch panel (right-hand rear)
10. Wheel arch panel (left-hand rear)
11. Valance (behind right-hand wheel arch)
12. Valance (behind left-hand wheel arch)
13. Floor panel (rear)
14. Cross member (rear floor)
15. Stiffener bracket (sides of rear cross member)
16. Top panel (above rear floor)
17. Rear bulkhead panel assembly
18. Panel assembly (front of spare wheel compartment)
19. Shield (interior light)
20. Panel (reinforcing tonneau)
21. Gearbox panel (right-hand)
22. Gearbox panel (left hand)
23. Reinforcement panel (right-hand shut pillar)
24. Closing panel (right-hand shut pillar)
25. Reinforcement panel (left-hand shut pillar)
26. Closing panel (left-hand shut pillar)
27. Reinforcement panel (right-hand sill, rear)
28. Reinforcement panel (left-hand sill, rear)
29. Reinforcement panel (left and right-hand sill, front)
30. Closing panel (right-hand sill, front)
31. Closing panel (left-hand sill, front)
32. Reinforcement panel (left-hand dash)
33. Exterior panel (right-hand dash)
34. Exterior panel (left-hand dash)
35. Sill outer panel (right-hand)
36. Sill outer panel (left-hand)
37. Door shell (right-hand)
38. Door shell (left-hand)
39. Hinge (right-hand)
40. Hinge (left-hand)
41. Check arm (both doors)
42. Rear wing panel (right-hand)
43. Rear wing panel (left-hand)
44. Petrol filler box
45. Tonneau top panel
46. Support panel (tonneau top panel)
47. Tonneau rear panel
48. Top quarter panel (right-hand)
49. Top quarter panel (left-hand)
50. Boot lid shell
51. Boot lid hinge (right-hand)
52. Boot lid hinge (left-hand)
53. Petrol filler box lid
54. Lower rear panel
55. Filler panel (right-hand stop/tail lamp)
56. Filler panel (left-hand stop/tail lamp)

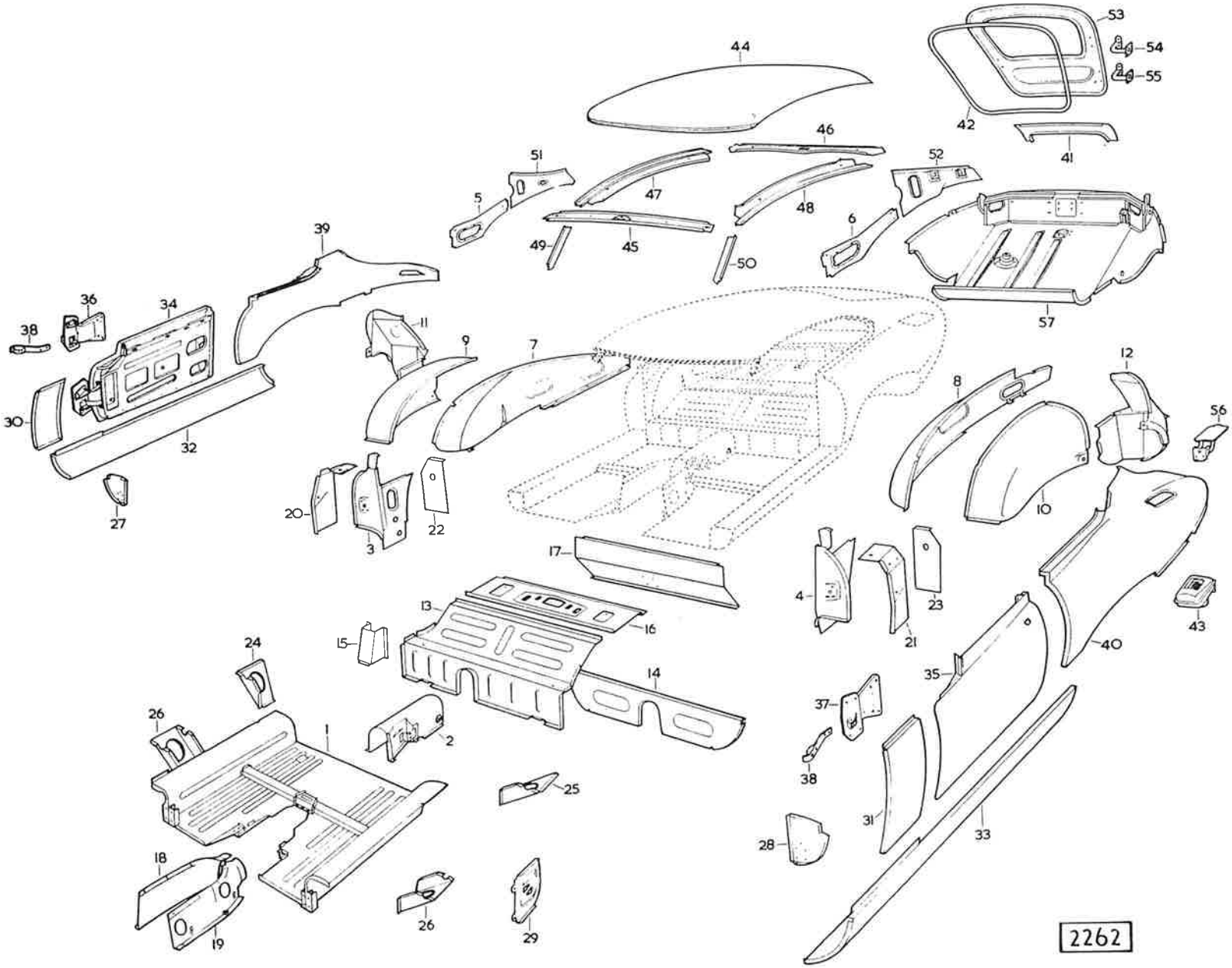

Fig. 4. Body panels (Fixed head coupe)

1. Floor assembly
2. Tunnel assembly
3. Shut pillar (right-hand side)
4. Shut pillar (left-hand side)
5. Support panel (right-hand)
6. Support panel (left-hand)
7. Wheel arch (right-hand inner)
8. Wheel arch (left-hand inner)
9. Wheel arch (right-hand outer)
10. Wheel arch (left-hand outer)
11. Wheel arch (right-hand rear)
12. Wheel arch (left-hand rear)
13. Floor panel (rear)
14. Cross member (rear floor)
15. Stiffener bracket
16. Top panel assembly
17. Rear bulkhead panel assembly
18. Gearbox panel (right-hand)
19. Gearbox panel (left-hand)
20. Reinforcement panel (right-hand shut pillar)
21. Reinforcement panel (left-hand shut pillar)
22. Closing panel (right-hand shut pillar)
23. Closing panel (left-hand shut pillar)
24. Panel (right-hand sill, rear)
25. Panel (left-hand sill, rear)
26. Panel (left and right-hand sill, front)
27. Closing panel (right-hand sill, front)
28. Closing panel (left-hand sill, front)
29. Panel (left-hand dash)
30. Exterior panel (right-hand dash side)
31. Exterior panel (left-hand dash side)
32. Sill outer panel (right-hand)
33. Sill outer panel (left-hand)
34. Door shell (right-hand)
35. Door shell (left-hand)
36. Hinge assembly (right-hand door)
37. Hinge assembly (left-hand door)
38. Check arm (left and right-hand doors)
39. Rear wing panel (right-hand)
40. Rear wing panel (left-hand)
41. Tail panel
42. Gutter (boot lid aperture)
43. Petrol filler box
44. Roof panel
45. Windscreen header panel
46. Reinforcement rail (rear)
47. Cantrail panel (right-hand)
48. Cantrail panel (left-hand)
49. Bead extension (right-hand cantrail)
50. Bead extension (left-hand cantrail)
51. Support panel (right-hand)
52. Support panel (left-hand)
53. Boot lid shell
54. Upper hinge (boot lid)
55. Lower hinge (boot lid)
56. Petrol filler box lid
57. Lower panel (rear)

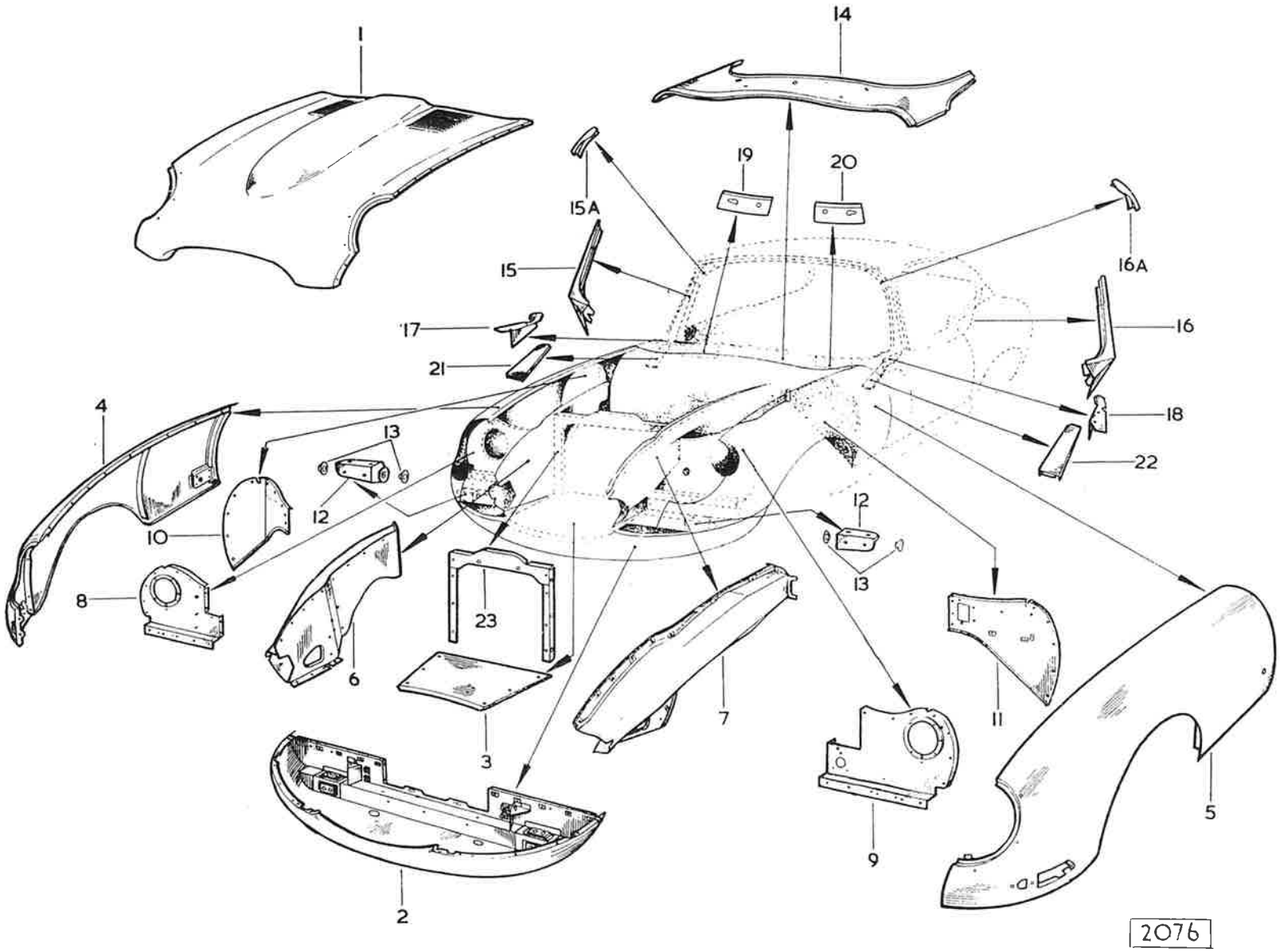

Fig. 5. Bonnet panels

1. Centre section
2. Under panel
3. Lower air duct
4. Side panel—right hand
5. Side panel—left hand
6. Valance—right hand
7. Valance—left-hand
8. Front diaphragm—right-hand
9. Front diaphragm—left-hand
10. Rear diaphragm—right-hand
11. Rear diaphragm—left-hand
12. Bonnet hinge
13. Nylon Bush
14. Scuttle top panel
15. Windscreen pillar—right-hand
16. Windscreen pillar—left-hand

15a. Reinforcement channel

16a. Reinforcement channel

17. Filler panel
18. Filler panel
19. Corner panel
20. Corner panel
21. Closing panel
22. Closing panel
23. Stoneguard mounting frame

EXHAUST SYSTEM

Removal

Release the two clips securing the muffler boxes to the rear of the silencer assembly.

Remove the bolt, nut and washer securing the mufflers.

Remove the bolt, nut and washer securing the mufflers to the rubber mounting bracket. Withdraw the mufflers.

Release the two clips securing the silencers to the two down pipes.

Remove the four bolts, nuts and washers securing the silencer assembly to the rubber mounting brackets attached to the body.

Lower the silencer assembly and withdraw from the down pipes.

Remove the four nuts and washers securing each down pipe to the exhaust manifolds and withdraw the down pipes.

Collect the sealing rings which are between the exhaust manifolds and the down pipe.

To remove the rubber mounting brackets securing the silencers, remove the nuts and washer securing the bracket to the body. To remove the muffler mounting bracket unscrew the two bolts and nuts securing the bracket to the body attachment.

Collect the rings which are between the exhaust manifolds and the down pipes.

Refitting

Renew the rings when refitting the exhaust down pipes to the manifold.

Refitting is the reverse of the removal procedure.

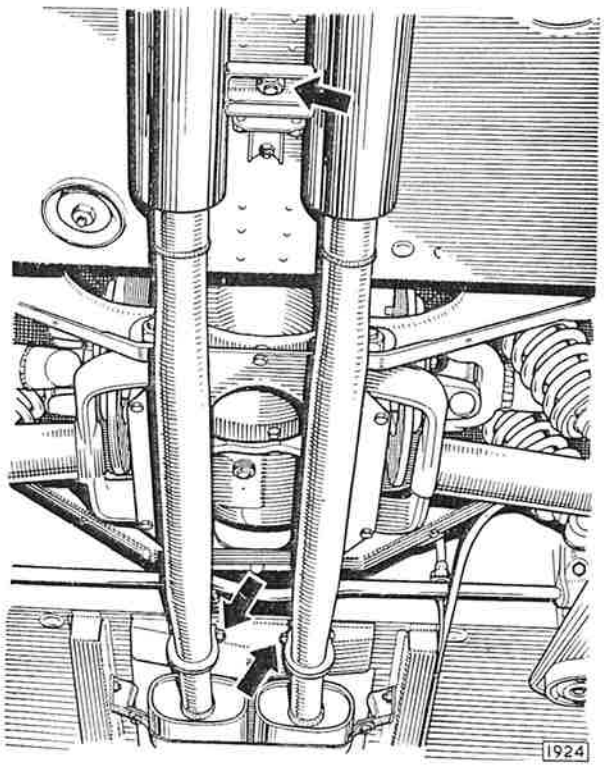

Fig. 31. The attachment points for the exhaust tail pipes.

EXHAUST SYSTEM

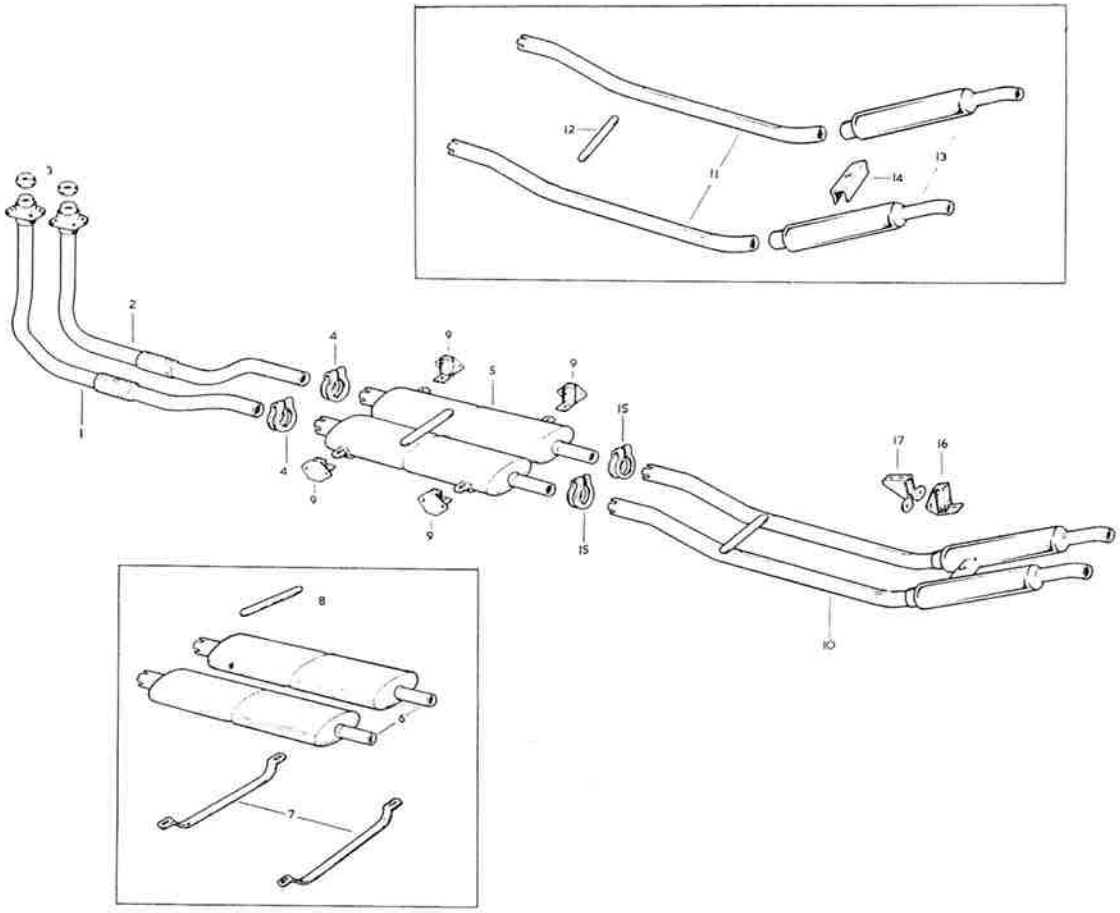

Fig. 32. Exploded view of the exhaust system

1. Front down pipe assembly
2. Rear down pipe assembly
3. Gasket
4. Clip
5. Twin silencer assembly
6. Silencer
7. Mounting strap
8. Stiffener
9. Rubber mounting
10. Tail pipe assembly
11. Tail pipe
12. Strap
13. Muffler box
14. Mounting bracket
15. Clip
16. Rubber mounting
17. Bracket

Printed in England by Buckler & Webb Ltd., Church Street, Birmingham 3

SECTION O

HEATING & WINDSCREEN WASHING EQUIPMENT

3·8 "E" TYPE GRAND TOURING MODELS

INDEX

CAR HEATING AND VENTILATING SYSTEM

WINDSCREEN WASHING EQUIPMENT

HEATING AND WINDSCREEN WASHING EQUIPMENT

CAR HEATING AND VENTILATING SYSTEM

The car heating and ventilating equipment consists of a heating element and an electrically driven fan mounted on the engine side of the bulkhead. Air from the heater unit is conducted:

(*a*) To a built-in duct fitted with two doors situated behind the instrument panel.

(*b*) To vents at the bottom of the windscreen to provide demisting and defrosting.

The amount of fresh air can be controlled at the will of the driver and is introduced into the system by operating the "Air" control lever and switching on the fan.

AIR CONTROL

The air control (marked "OFF-AIR-ON") controls the amount of fresh air passing through the heater element; when this control is placed in the "OFF" position the supply of air is completely cut off.

Placed in the "ON" position the maximum amount of air passes through the heater element. By placing the control in intermediate positions varying amounts of air may be obtained.

TEMPERATURE CONTROL

The temperature control (marked "HOT-COLD") situated on the facia panel operates a valve which controls the amount of hot water passing through the heater element; when this control is placed in the "COLD" position the supply of hot water to the element is completely cut off so that the cold air only can be admitted for ventilating the car in hot weather.

Placed in the "HOT" position the maximum amount of hot water passes through the heater element. By placing the control in intermediate positions varying degrees of heat may be obtained.

AIR DISTRIBUTION

The proportion of air directed to the windscreen or the interior of the car can be controlled by the position of the two doors situated under the duct behind the instrument panel.

With the heater doors fully closed the maximum amount of air will be directed to the windscreen for rapid demisting or defrosting.

With the heater doors fully open, air will be directed into the car interior and to a lesser degree to the windscreen.

FAN SWITCH

The heater fan for the car heating and ventilating system considerably increases the flow of air through the system and is controlled by a three-position switch (marked "Fan").

Lift the switch to the second position for slow speed and to the third position for maximum speed, whichever is required.

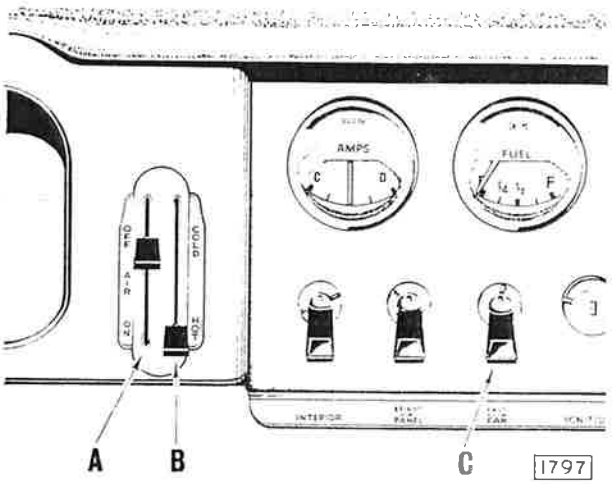

Fig. 1. Heating and ventilating controls.
A *Air control lever.*
B *Temperature control lever.*
C *Fan switch.*

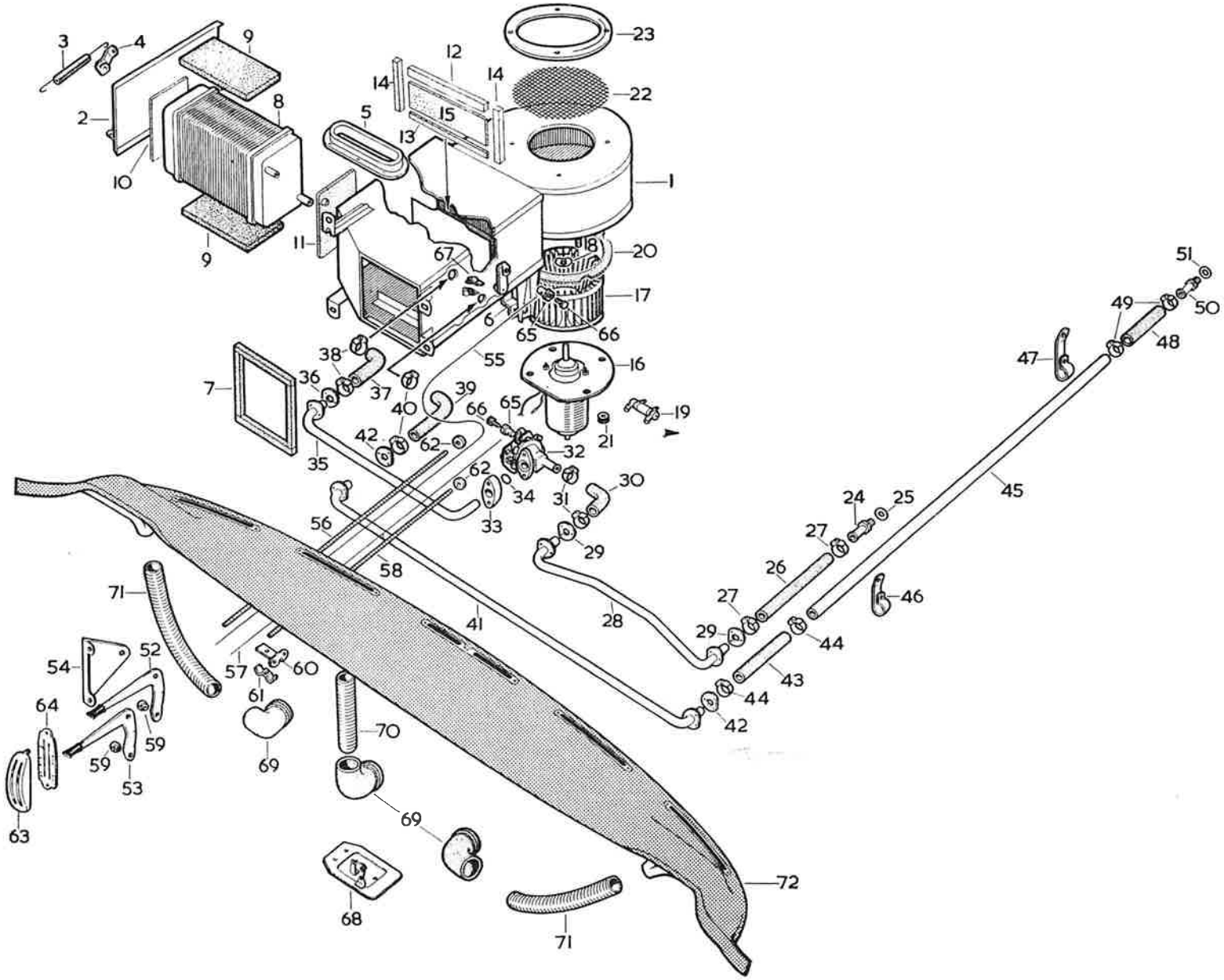

Fig. 2. Exploded view of heater components.

1. Heater case.
2. Side panel.
3. Spring.
4. Flap lever.
5. Air release duct.
6. Mounting bracket.
7. Seal between heater case and dash.
8. Water radiator for heater.
9. Felt seal.
10. Seal.
11. Seal.
12. Seal on air control flap.
13. Seal on heater case.
14. Seal on air control flap.
15. Air release duct seal.
16. Fan motor.
17. Fan.
18. Spire nut.
19. Electrical resistance.
20. Sealing ring.
21. Grommet.
22. Wire mesh.
23. Wire mesh securing ring.
24. Manifold heater pipe adaptor.
25. Copper washer.
26. Water hose.
27. Hose clip.
28. Water feed pipe.
29. Feed pipe flange.
30. Water hose elbow.
31. Hose clip.
32. Water control tap.
33. Control tap mounting block.
34. Sealing ring.
35. Feed pipe from water control tap.
36. Feed pipe securing flange.
37. Water hose elbow.
38. Hose clip.
39. Water hose elbow.
40. Hose clip.
41. Water return pipe.
42. Securing flange.
43. Water hose.
44. Hose clip.
45. Water return pipe.
46. Return pipe mounting clip.
47. Return pipe mounting clip.
48. Water hose.
49. Hose clips.
50. Water pump adaptor.
51. Copper washer.
52. Air flap control lever.
53. Water control tap lever.
54. Control lever support bracket.
55. Air flap control cable.
56. Conduit for air flap control cable.
57. Water tap control cable.
58. Conduit for water tap control cable.
59. Control cable retaining clip.
60. Cable abutment clamp bracket.
61. Abutment clamp.
62. Grommet.
63. Control lever escutcheon.
64. Plate.
65. Inner control cable trunnions.
66. Setscrew.
67. Abutment clamp.
68. Heater doors.
69. Rubber elbow.
70. Demister hose.
71. Demister hose.
72. Screen rail.

Operation of the fan is required mainly when the car is stationary or running at a slow speed. At higher road speeds it will be found possible to dispense with the fan as air will be forced through the system due to the passage of the car through the air.

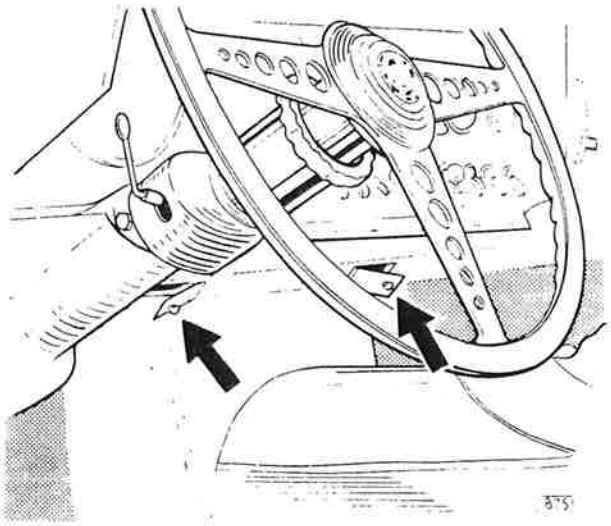

Fig. 3. Heater duct doors.

COLD WEATHER

To obtain fresh air heating, demisting and defrosting:

(*a*) Set fresh air control to DESIRED POSITION.
(*b*) Set temperature control to DESIRED POSITION.
(*c*) Switch ON fan at required speed.
(*d*) OPEN heater doors.

To obtain rapid demisting and defrosting:

(*a*) Turn fresh air control to FULLY ON.
(*b*) Set temperature control to HOT.
(*c*) Switch ON fan—fast position.
(*d*) CLOSE heater doors.

HOT WEATHER

To obtain ventilation and demisting:

(*a*) Set fresh air control to DESIRED POSITION.
(*b*) Set temperature control to COLD.
(*c*) Switch ON fan at required speed.
(*d*) OPEN heater doors.

To obtain rapid demisting:

(*a*) Set fresh air control to FULLY ON.
(*b*) Set temperature to COLD.
(*c*) Switch ON fan—fast position.
(*d*) CLOSE heater doors.

WARNING

There is the possibility that fumes may be drawn into the car from the atmosphere when travelling in dense traffic and in such conditions it is advisable to close the heater air control and switch off the fan.

HEATER

Removal

Raise the bonnet and drain the radiator and cylinder block.

Disconnect the positive battery terminal.

Slacken the two jubilee clips securing the heater hoses to the heater body.

Slacken the pinch bolt securing the heater air control flap cable to the lever.

Slacken the pinch bolt securing the conduit casing to the heater body and remove the cable.

Disconnect the three electrical wires for the fan at the snap connector.

Remove the four bolts, plain and serrated washers securing the heater body to the scuttle.

Remove the two screws securing the heater body bracket to the sub frame.

Remove the heater.

Refitting

Refitting is the reverse of the removal procedure. Ensure that the rubber seal attached to the heater body outlet to car aperture is in the correct position. Move the heater flap operating lever on the side facia panel into the "ON" position. Move the heater flap lever into the fully forward position (A Fig. 4) and pass the control cable through the two securing points. Tighten the two pinch bolts securing the control cable and conduit casing.

HEATER WATER CONTROL TAP

Removal

Slacken the pinch bolt securing the water tap control lever to the cable.

Slacken the pinch bolt securing the cable conduit casing to the water tap.

Slacken the jubilee clip securing the rubber hose to the water tap.

Remove the two bolts and spring washers which secure the water tap, rubber sealing washer and distance piece to the scuttle.

Withdraw the heater tap from the heater pipe.

Refitting

Refitting is the reverse of the removal procedure. Ensure that the sealing rubber is fitted into the machined

faces of the water control tap and distance piece. Move the water control tap operating lever into the "HOT" open position. Move the lever on the water control tap fully forward into the "HOT" position (B Fig. 4) and pass the control cable through the securing points. Tighten the two pinch bolts securing the control cable and conduit casing.

FAN MOTOR

Removal

Remove the heater as described on page O.6.

Remove the three bolts, serrated washers and rubber seals securing the fan to the heater.

Withdraw the fan motor and fan from the heater body.

Withdraw the small spring clip securing the fan to fan motor spindle.

Refitting

Refitting is the reverse of the removal procedure. Ensure the small fan retaining spring clip is replaced.

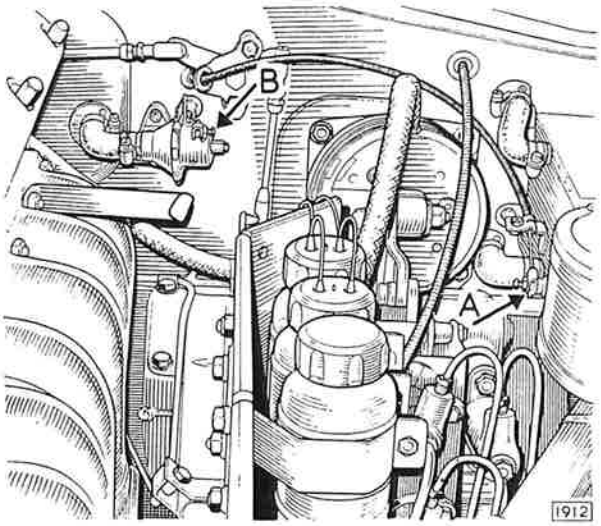

Fig. 4. Setting the heater operating levers.

WINDSCREEN WASHING EQUIPMENT

The windscreen washer is electrically operated and comprises a glass water container mounted in the engine compartment which is connected to jets at the base of the windscreen. Water is delivered to the jets by an electrically driven pump incorporated in the water container.

OPERATION

The windscreen washer should be used in conjunction with the windscreen wipers to remove foreign matter that settles on the windscreen.

Lift the switch lever (marked "Washer") and release immediately when the washer should operate at once and continue to function for approximately seven seconds. Allow a lapse of time before operating the switch for a second time.

WARNING

If the washer does not function immediately check that there is water in the container.

The motor will be damaged if the switch is held closed for more than one or two seconds if the water in the container is frozen.

The washer should not be used under freezing conditions as the fine jets of water spread over the windscreen by the blades will tend to freeze up.

In the summer the washer should be used freely to remove insects before they dry and harden on the screen.

FILLING-UP

The water should be absolutely CLEAN. If possible use SOFT water for filling the container, but if this is not obtainable and hard water has to be used, frequent operation and occasional attention to the nozzle outlet holes will be amply repaid in preventing the formation of unwelcome deposits.

The correct water level is up to the bottom of the container neck. Do not overfill, or unnecessary splashing may result. Always replace the rubber filler cover correctly after filling, pressing it fully home.

It is not possible to empty the container completely with the pump. **Refilling is necessary when the water level has fallen so that the top of the auxiliary reservoir**

is uncovered. About 30 full operations will be obtained from one filling.

When using the washer, an indication of the need to refill the container is given by the behaviour of the unit. The time taken for the auxiliary reservoir to refill increases as the water level in the container falls.

As soon as the water level has fallen to the top of the auxiliary reservoir, the amount of water delivered to the windscreen will decrease with successive operations and the time the unit runs will, in proportion, become less.

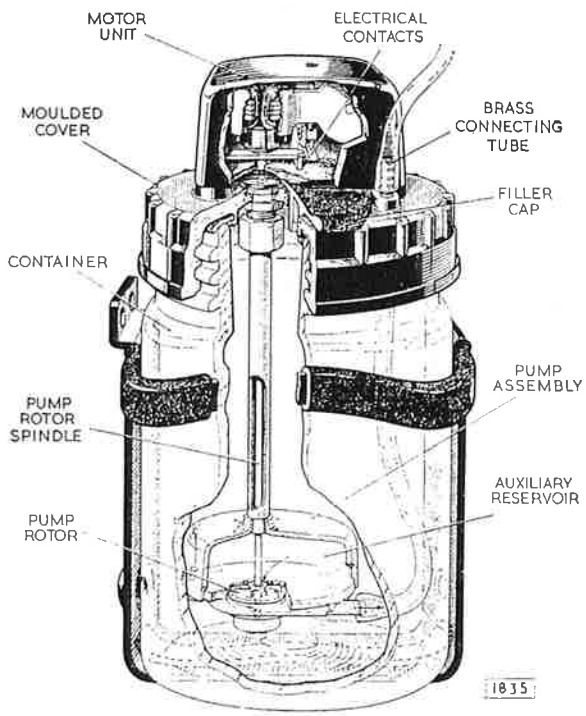

Fig. 5. Windscreen washer water container.

If the water level is allowed to fall still further, until it is down to the bottom of the auxiliary reservoir, the automatic action will cease and water will be delivered to the windscreen only as long as the switch is operated. This will continue until the water level has fallen to the inlet orifices, when the pump will be above the water level and no water will be available for delivery to the windscreen.

Do not continue to operate the switch after the available water has been used up, otherwise damage may be caused to the unit.

Refilling the container will restore normal operation of the unit.

COLD WEATHER

To avoid damage by frost, add denatured alcohol (methylated spirits) as follows:

The underside of the rubber filler cover will be found to form a measure. Two measures of denatured alcohol should be added per container of water. USE NO OTHER ADDITIVES WHATSOEVER.

ADJUSTING THE JETS

With a screwdrive turn each nozzle in the jet holder until the jets of water strike the windscreen in the area swept by the wiper blades. It may be necessary to adjust the nozzles slightly after a trial on the road due to the jets of water being deflected by the airstream.

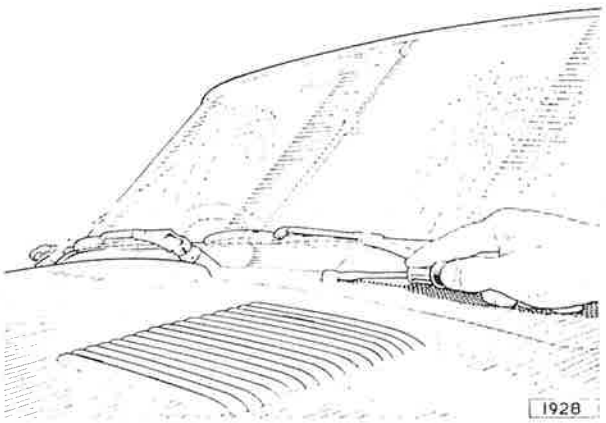

Fig. 6. Adjusting the windscreen washer jets.

JET NOZZLES

Cleaning

To clear a blocked jet nozzle completely unscrew the nozzle from the jet holder. Clear the small orifices with a thin piece of wire or blow out with compressed air; operate the washer with the nozzle removed. Allow the water to flush through the jet holder and then replace the nozzle.

LUBRICATION

If, after lengthy service, the motor is found to be running slowly, unscrew the moulded cover from the container and apply one or two drops only of thin machine oil to the felt pad situated in the gap between the cover and the motor unit. Do not over-lubricate or excess oil may find its way into the water container when the cover is refitted, with consequent smearing of the windscreen.

Printed in England by Buckler & Webb Ltd., Church Street, Birmingham 3

SECTION P

ELECTRICAL AND INSTRUMENTS

3·8 "E" TYPE
GRAND TOURING MODELS

INDEX

Battery

Distributor

Flasher Units

Fuse Unit

Generator Model C42
(Fitted to later "E" Type models)

Generator Model C45 PVS-6
(Fitted to early "E" Type models)

INDEX *(continued)*

Horns

Lamps

RB 310 Current and Voltage Regulator

RB 340 Current and Voltage Regulator

Starter Motor

Starter Drive

INDEX *(continued)*

Windscreen Wiper

Miscellaneous

Instruments

INDEX *(continued)*

Instruments *(continued)*

ELECTRICAL AND INSTRUMENTS

BATTERY

The Lucas FRV11/7A battery is of the semi-linkless type, the short cell inter-connectors being partially exposed to enable testing of the individual cells to be carried out with a heavy discharge tester.

DATA

Battery type	FRV11/7A
Voltage	12
Number of plates per cell	11
Capacity at 10-hour rate	55 ampere hours
Capacity at 20-hour rate	60 ampere hours

ROUTINE MAINTENANCE

Wipe away any foreign matter or moisture from the top of the battery, and ensure that the connections and the fixings are clean and tight.

About once a month, or more frequently in hot weather, examine the level of the electrolyte in the cells. If necessary add distilled water to bring the electrolyte just level with the separator guards, which can be seen when the vent plugs are removed.

The use of a Lucas battery filler will be found helpful in this topping-up process, as it ensures that the correct electrolyte level is obtained automatically and also prevents distilled water from being spilled over the battery top.

Distilled water should always be used for topping-up. In an emergency however, clean soft rain water collected in an earthenware container may be used.

Note: Never use a naked light when examining a battery, as the mixture of oxygen and hydrogen given off by the battery when on charge, and to a lesser extent when standing idle, can be dangerously explosive.

REMOVAL

Unscrew the two wing nuts retaining the battery strap; remove the fixing rods and strap. Disconnect terminals and lift out battery from cradle.

REFITTING

Refitting is the reverse of the removal procedure. Before refitting the cable connectors, clean the terminals and coat with petroleum jelly.

PERSISTENT LOW STATE OF CHARGE

First consider the conditions under which the battery is used. If the battery is subjected to long periods of discharge without suitable opportunities for recharging, a low state of charge can be expected. A fault in the generator or regulator, or neglect of the battery during a period of low or zero mileage may also be responsible for the trouble.

Vent Plugs

See that the ventilating holes in each vent plug are clear.

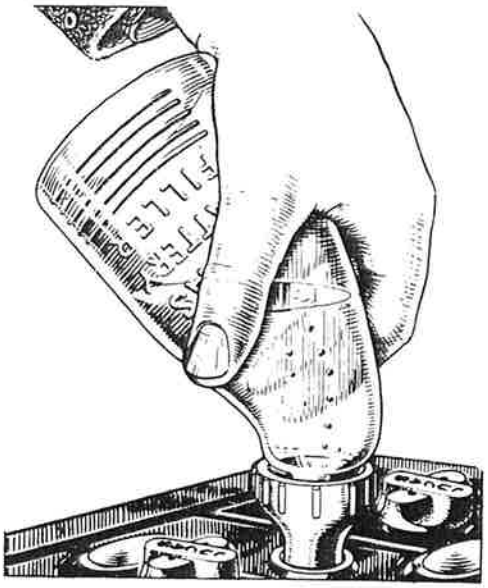

Fig. 1. Lucas battery filler.

Level of Electrolyte

The surface of the electrolyte should be just level with the tops of the separators guards. If necessary, top up with distilled water. Any loss of acid from spilling or spraying (as opposed to the normal loss of **water** by evaporation) should be made good by dilute acid of the same specific gravity as that already in the cell.

Cleanliness

See that the top of the battery is free from dirt or moisture which might provide a discharge path. Ensure that the battery connections are clean and tight.

Hydrometer Tests

Measure the specific gravity of the acid in each cell in turn with a hydrometer. To avoid misleading readings, do not take hydrometer readings immediately after topping-up.

The readings given by each cell should be approximately the same. If one cell differs appreciably from the others, an internal fault in the cell is indicated.

The appearance of the electrolyte drawn into the hydrometer when taking a reading gives a useful indication of the state of the plates. If the electrolyte is very dirty, or contains small particles in suspension, it is possible that the plates are in a bad condition.

The specific gravity of the electrolyte varies with the temperature, therefore, for convenience in comparing specific gravities, this is always corrected to 60°F., which is adopted as a reference temperature. The method of correction is as follows:—

For every 5°F. below 60°F. deduct ·002 from the observed reading to obtain the true specific gravity at 60°F.

For every 5°F. above 60°F. add ·002 to the observed reading to obtain the true specific gravity at 60°F.

The temperature must be that indicated by a thermometer actually immersed in the electrolyte, and not the air temperature.

Compare the specific gravity of the electrolyte with the values given in the table and so ascertain the state of charge of the battery.

If the battery is in a discharged state, it should be recharged, either on the vehicle by a period of daytime running or on the bench from an external supply, as described under "Recharging From An External Supply".

Discharge Test

A heavy discharge tester consists of a voltmeter, 2 or 3 volts full scale, across which is connected a shunt resistance capable of carrying a current of several hundred amperes. Pointed prongs are provided for making contact with the inter-cell connectors.

Press the contact prongs against the exposed positive and negative terminals of each cell. A good cell will maintain a reading of 1·2—1·5 volts, depending on the state of charge, for at least 6 seconds. If, however, the reading rapidly falls off, the cell is probably faulty and a new plate assembly may have to be fitted.

State	Home and climates with shade temperature ordinarily below 80°F (26·6°C). Specific gravity of electrolyte (corrected to 60°F)	Climates with shade temperature frequently over 80°F (26·6°C). Specific gravity of electrolyte (corrected to 60°F)
Fully charged	1·270—1·290	1·210—1·230
About half discharged	1·190—1·210	1·130—1·150
Completely discharged	1·110—1·130	1·050—1·070

RECHARGING FROM AN EXTERNAL SUPPLY

If the battery tests indicate that the battery is merely discharged, and is otherwise in a good condition, it should be recharged, either on the vehicle by a period of daytime running or on the bench from an external supply.

If the latter, the battery should be charged at 5·5 amperes until the specific gravity and voltage show no increase over three successive hourly readings. During the charge the electrolyte must be kept level with the tops of the separator guards by the addition of distilled water.

A battery that shows a general falling-off in efficiency common to all cells, will often respond to the process known as "cycling". This process consists of fully charging the battery as described above and then discharging it by connecting to a lamp board, or other load, taking a current of 5 amperes. The battery should be capable of providing this current for at least 7 hours before it is fully discharged, as indicated by the voltage of each cell falling to 1·8. If the battery discharges in a shorter time, repeat the "cycle" of charge and discharge.

PREPARING NEW UNFILLED, UNCHARGED BATTERIES (MODEL FRV11/7A) FOR SERVICE

Preparation of Electrolyte

Batteries should not be filled with acid until required for initial charging.

Electrolyte of the specific gravity required is prepared by mixing distilled water and concentrated sulphuric acid, usually of 1·835 specific gravity. The mixing must be carried out either in a lead-lined tank or in a suitable glass or earthenware vessel. Slowly add the acid to the water, stirring with a glass rod. **Never add the water to the acid,** as the resulting chemical reaction causes violent and dangerous spurting of the concentrated acid. The correct specific gravity for the filling acid and approximate proportions of acid and water are indicated in the following table;

Specific Gravity of Filling Acid (corrected to 60°F.)	
Home and Climates with shade temperature ordinarily below 80°F (26·6°C) 1·270 Add 1 part by volume of acid (1·835 S.G.) to 2·8 parts of distilled water to mix this electrolyte	Climates with shade temperatures frequently above 80°F (26·6°C) 1·210 Add 1 part by volume of acid (1·835 S.G.) to 4 parts of distilled water to mix this electrolyte
Quantity of electrolyte required per cell 1¼ pints approximately (720 cc.)	

Heat is produced by the mixture of acid and water, and the electrolyte should be allowed to cool before taking hydrometer readings—unless a thermometer is used to measure the actual temperature, and a correction applied to the reading before pouring the electrolyte into the battery.

Filling the Battery

The temperature of the acid, battery and filling-in must not be below 32°F.

Carefully break the seals in the filling holes and fill each cell to the level of the separator guard with electrolyte of the appropriate specific gravity. Allow the battery to stand for twelve hours, in order to dissipate the heat generated by the chemical action of the acid on the plates and separators. Restore levels by adding more acid of the same specific gravity and then proceed with the initial charge.

Initial Charge Rate

Charge at a rate of 3·5 amps until the voltage and specific gravity readings show no increase over five successive hourly readings. This may take up to 80 hours, depending on the length of time the battery has been stored before charging.

Keep the current constant by varying the series resistance of the circuit or the generator output.

This charge should not be broken by long rest periods. If, however, the temperature of any cell rises above the permissible maximum (that is, 100°F. for batteries filled with 1·270 S.G. acids, 120°F. for those with 1·210 S.G. acid), the charge must be interrupted until the temperature has fallen at least 10°F., below that figure. Throughout the charge, the electrolyte must be kept level with the top of the separator guards by the addition of acid solution of the same specific gravity as the original filling-in acid, until the specific gravity and voltage readings have remained constant for five successive hourly readings. If the charge is continued beyond that point, top up with distilled water.

At the end of the charge carefully check the specific gravity in each cell to ensure that, when corrected to 60°F., it lies within the specified fully-charged limits. If any cell requires adjustment, some of the electrolyte must be siphoned off and replaced either by distilled water or by acid of the strength originally used for filling-in, depending on whether the specific gravity is too high or too low. Continue the charge for an hour or so to ensure adequate mixing of the electrolyte and again check the specific gravity readings. If necessary, repeat the adjustment process until the desired reading is obtained in each cell. Finally, allow the battery to cool, and siphon off any electrolyte above the tops of the separator guards.

PREPARING NEW "DRY-CHARGED" BATTERIES (MODEL FRVZ11/7A) FOR SERVICE

Filling the Cells

Carefully break the seals in the filling holes and fill each cell with correct specific gravity acid as shown in the table on page P.8 to the top of the separator guards in one operation. The temperatures of the filling room, battery and acid should be maintained at between 60°F. and 100°F. If the battery has been stored in a cool place, it should be allowed to warm up to room temperature before filling.

Freshening Charge

Batteries filled in this way are up to 90% charged and capable of giving a starting discharge one hour after filling. When time permits, however, a short freshening charge will ensure that the battery is fully charged.

Such a freshening charge should be 5 amperes for not more than 4 hours.

During the charge the electrolyte must be kept level with the top of the separators by the addition of distilled water. Check the specific gravity of the electrolyte at the end of the charge; if 1·270 acid was used to fill the battery, the specific gravity should now be between 1·270 and 1·290; if 1·210 acid, between 1·210 and 1·230.

Maintenance in Service

After filling, a dry-charged battery needs only the attention normally given to all lead-acid type batteries.

DISTRIBUTOR

REMOVAL

Spring back the clips and remove the distributor cap.

Disconnect the low tension wire from the distributor.

Disconnect the vacuum pipe by unscrewing the union nut at the vacuum advance unit.

Remove distributor clamping plate retaining set-screw and withdraw distributor.

REFITTING

If the distributor clamping plate pinch bolt has not been slackened during removal of distributor refitting will be the reverse of the removal procedure. Enter the distributor into the cylinder block with the vacuum advance unit connection facing the cylinder block.

Rotate the rotor arm until the driving dog engages with the distributor drive shaft.

If the distributor clamping plate pinch bolt has been slackened during removal of distributor it will be necessary to reset the ignition timing as follows:—

Ignition Timing

Set the micrometer adjustment in the centre of the scale.

Connect the low tension wire to the terminal on the distributor body.

Enter the distributor into the cylinder block with the vacuum advance unit connection facing the cylinder block.

Rotate the rotor arm until the driving dog engages with the distributor drive shaft.

Rotate the engine until the rotor arm approaches the No. 6 (front) cylinder segment in the distributor cap.

Slowly rotate the engine until the ignition timing scale on the crankshaft damper is the appropriate number of degrees before the pointer on the sump. (See Data).

Connect a 12 volt test lamp with one lead to the distributor terminal (or the CB terminal of the ignition coil) and the other to a good earth.

Slowly rotate the distributor body until the points are just breaking, that is, when the lamp lights up.

Tighten the distributor plate pinch bolt.

A maximum of six clicks on the vernier adjustment from this setting, to either advance or retard. is allowed.

ROUTINE MAINTENANCE

Distributor Contact Breaker Points

Every 2,500 miles (500 miles with new contact set) check the gap between the contact points with feeler gauges when the points are fully opened by one of the cams on the distributor shaft. A combined screwdriver and feeler gauge is provided in the tool kit.

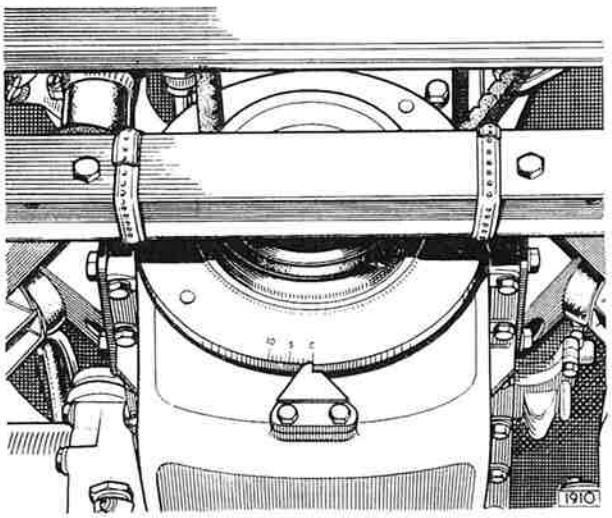

Fig. 2. Ignition timing scale on crankshaft damper.

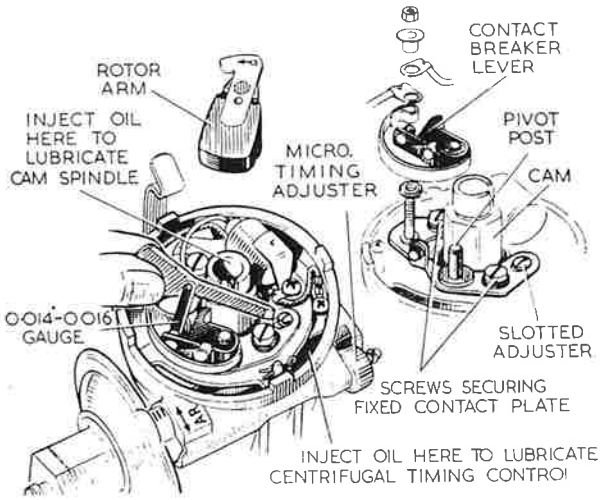

Fig. 3. Checking point gap and lubrication points.

The correct gap is ·014″—·016″ (·36—·41 mm.).

If the gap is incorrect, slacken the two screws securing the fixed contact plate and turn the eccentric-headed adjustment screw in its slot until the required gap is obtained. Tighten the securing screws and recheck the gap. (Fig. 3).

Lubrication—Every 2,500 miles

Remove the moulded cover and withdraw the rotor arm. A tight rotor arm can be withdrawn by using a suitable pair of levers carefully applied at opposite points below the rotor moulding—never against the metal electrode.

Important: Do not allow oil or grease on or near the contacts when carrying out the following lubrication.

Cam Bearing

To lubricate the cam bearing, inject a few drops of thin machine oil into the rotor arm spindle (Fig. 3). Do not remove or slacken the screw located inside the spindle—a space is provided beneath the screwhead to allow the lubricant to reach the cam bearing.

Cam

Lightly smear the faces of the cam (Fig. 3) with Mobilgrease No. 2 or with clean engine oil.

DATA

Ignition Distributor Type	DMBZ.6A
8 to 1 Compression Ratio	40617A
9 to 1 Compression Ratio	40617A
Cam dwell angle	35° ± 2°
Contact breaker gap	0·014″—0·016″ (0·36—0·41 mm.)
Contact breaker spring tension (Measured at free contact)	18—24 ozs. (512—682 gms.)

Centrifugal Timing Control

Inject a few drops of thin machine oil through a convenient aperture in the contact breaker base plate.

Cleaning

Clean the moulded cover inside and outside with a soft dry cloth. Pay particular attention to spaces between the terminals. Check that the small carbon brush inside the moulding can move freely in its holder.

Whilst the rotor arm is removed, examine the contact breaker. Rough, burned or blackened contacts can be cleaned with fine carborundum stone or emery cloth. After cleaning remove any grease or metallic dust with a petrol moistened cloth.

Contact cleaning is facilitated by removing the lever to which the moving contact is attached. To do this, remove the nut, insulating piece and electrical connections from the post to which the contact breaker spring is anchored. The contact breaker lever can then be lifted off the pivot post and the spring from the anchor post.

After cleaning and trimming the contacts, smear the pivot post (Fig. 3) with Ragosine Molybdenised Non-creep Oil or with Mobilgrease No. 2. Re-assemble the contact breaker and check the setting.

Refit the rotor arm, carefully locating its moulded projection in the spindle keyway and pushing it on as far as it will go.

Refit the moulded cover and spring the two side clips into position.

IGNITION TIMING

8 to 1 Compression Ratio	9° BTDC
9 to 1 Compression Ratio	10° BTDC

ELECTRICAL AND INSTRUMENTS

SERVICING

Dismantling

When dismantling, note carefully the position in which the various components are fitted in order to simplify their re-assembly.

Bearing Replacement

The ball bearing at the upper end of the shank can be removed with a shouldered mandrel locating on the inner journal of the bearing.

When fitting a new ball bearing, the shouldered mandrel must locate on both inner and outer journals of the bearing.

The bearing bush at the lower end of the shank can be driven out with a suitable punch.

A bearing bush may be prepared for fitting by allowing it to stand completely immersed in medium viscosity (S.A.E. 30—40) engine oil for at least 24 hours. In cases of extreme urgency, this period of soaking may be shortened by heating the oil to 100°C. for 2 hours and then allowing to cool before removing the bush.

The bush is pressed into the shank with a shouldered mandrel. The mandrel should be hardened and polished and approximately 0·0005″ greater in diameter than the distributor shaft. To prevent subsequent withdrawal of the bush with the mandrel, a stripping washer should be fitted between the shoulder of the mandrel and the bush.

Under no circumstances should the bush be overbored by reamering or by any other means, since this will impair the porosity and therefore the lubricating quality of the bush.

Re-assembly

When re-assembling, Ragosine molybdenised non-creep oil or (failing this) clean engine oil, should be smeared on the shaft and, more lightly, on the contact breaker bearing plate.

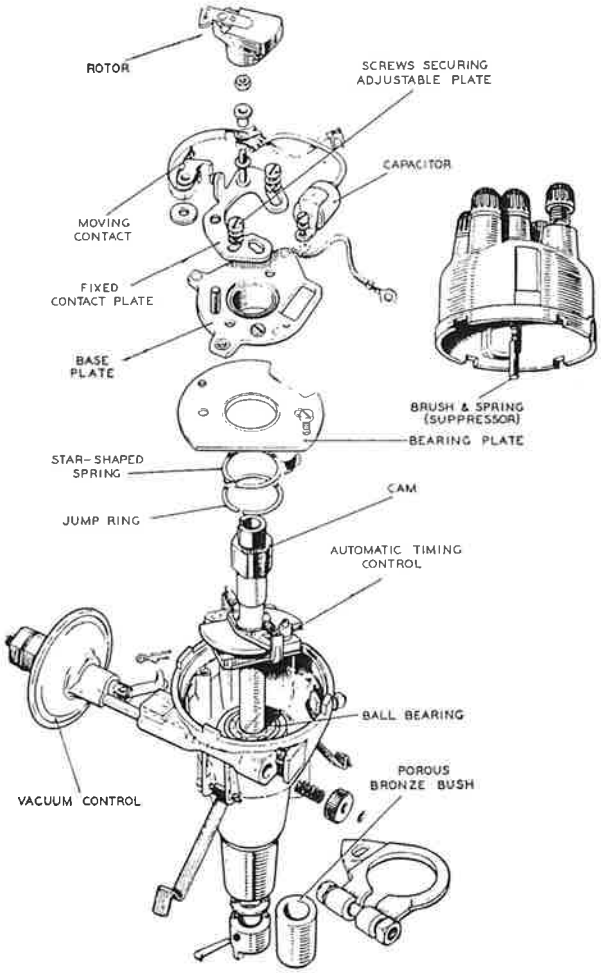

Fig. 4. Exploded view of distributor.

IGNITION DISTRIBUTOR TEST DATA

			VACUUM TIMING ADVANCE TESTS The distributor must be run immediately below the speed at which the centrifugal advance begins to function to obviate the possibility of an incorrect reading being registered.				CENTRIFUGAL TIMING ADVANCE TESTS Mount distributor in centrifugal advance test rig and set to spark at zero degrees at 100 r.p.m.				
Distributor Type	Lucas Service Number	Lucas Vacuum Unit Number	Vacuum in inches of mercury and advance in degrees		No advance in timing below-ins. of mercury	Lucas Advance Springs Number	Accelerate to-RPM and note advance in degrees		Decelerate to-RPM and note advance in degrees		No advance in timing below-RPM
			Inches	Degrees			RPM	Degrees	RPM	Degrees	
DMBZ 6A	40617A	54410415	20 13 9 7½ 6	7—9 6—8½ 2½—5½ 0—3 0—½	4½	54410416	2,000	12	1,500 1,300 850 650 450	10—12 9—11 7—9 3½—6½ 0—2½	325

Auto advance weights Lucas number 410033/S. One inch of mercury = 0·0345 kg/cm²

FLASHER UNITS

The flasher unit is housed in a cylindrical container plugged into a base block which is a part of the main wiring harness, and is attached to the bulkhead behind the facia on the driver's side.

The electrical contact is made by means of three blades, extending from the base of the unit. These blades are offset to prevent any possibility of a wrong connection being made.

The automatic operation of the flasher lamps is controlled by means of a switch, contained in the flasher unit, being operated automatically by the alternative heating and cooling of an actuating wire; also incorporated is a small relay to flash the indicator warning lights when the system is functioning correctly. Failure of either of these lights to flash will indicate a fault.

In the event of trouble occurring the following procedure should be followed:—

(i) Check bulbs for broken filaments.

(ii) Refer to the wiring diagram and check all flasher circuit connections.

(iii) Switch on the ignition and check with a voltmeter that flasher unit terminal 'B' is at 12 volts, with respect to earth.

(iv) Connect together flasher unit terminals 'B' and 'L' and operate the direction indicator switch. If the flasher lamps now light the flasher unit is defective and must be replaced.

(v) If after the above checks the bulb still does not light a fault is indicated in the flasher switch which is best checked by substitution.

Note: It is important that only bulbs of the correct wattage rating (that is, 21 watts) are used in the flasher lamps.

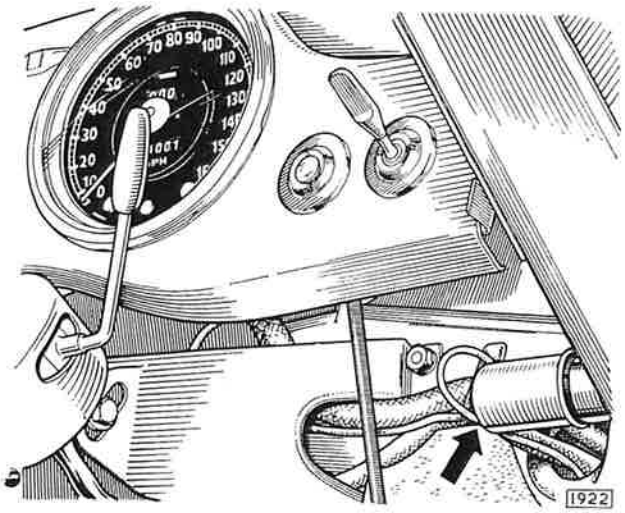

Fig. 5. Showing position of flasher unit behind facia panel.

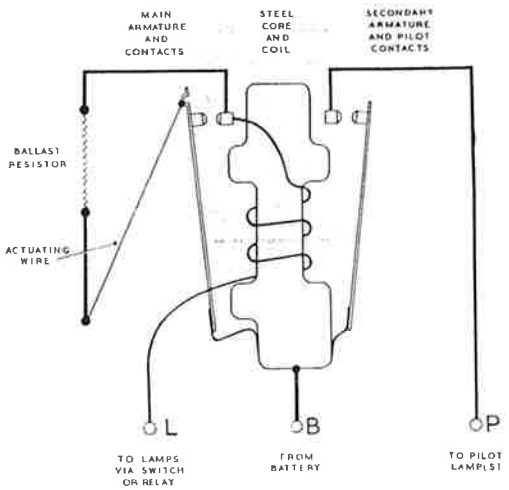

Fig. 6. Flasher unit circuit diagram.

FUSE UNITS

Four Model 4 FJ fuse units, each carrying two live glass cartridge type fuses and two spares, are incorporated in the electrical system and are located behind the instrument panel.

Access to the fuses is obtained by removing the two instrument panel retaining screws (top left-hand and top right-hand corners).

The instrument panel will then hinge downwards exposing the fuses and the fuse indicator panel. The circuits controlled by individual fuses are shown on the indicator panel and it is essential that the blown fuse is replaced by one of the correct value.

Only one end of the spare fuses is visible and they are retained in position by a small spring clip. Always replace the spare fuse as soon as possible.

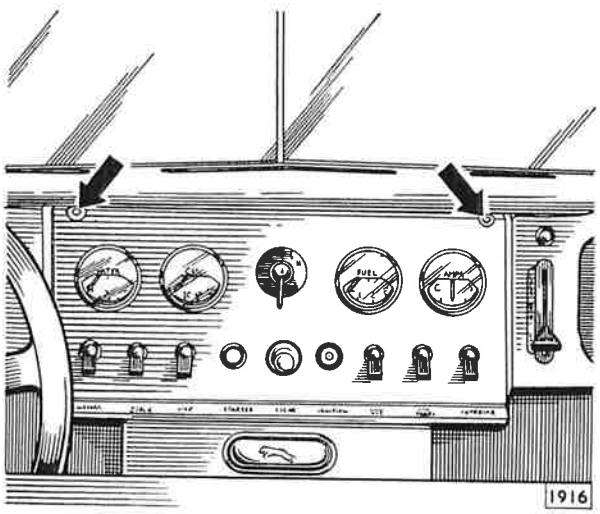

Fig. 7. The instrument panel, the two arrows indicate the securing screws.

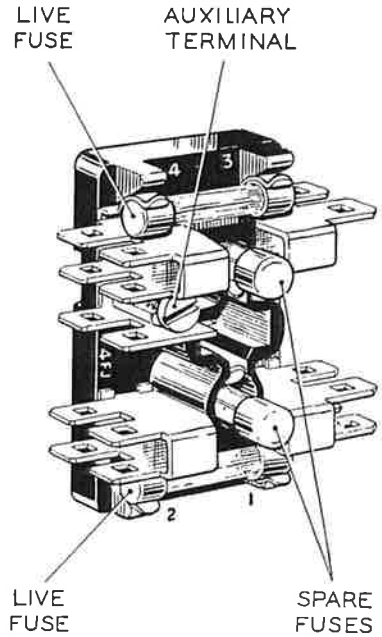

Fig. 8. The Model 4J fuse unit.

GENERATOR—MODEL C42

(Fitted to later "E" Type models)

REMOVAL

Disconnect the cables from the two terminals at the rear of the dynamo noting that they are of different sizes.

Remove the nut and bolt securing the adjusting link to the dynamo.

Remove the two nuts and bolts securing the dynamo to the mounting bracket when the dynamo can be lifted out.

Remove the dynamo belt.

REFITTING

Refitting is the reverse of the removal procedure. When the dynamo belt has been refitted move the dynamo to a position where it is possible to depress the belt about ½" (12 mm.) midway between the water pump and dynamo pulleys.

1. GENERAL

The generator is a shunt-wound, two-pole, two-brush machine, arranged to work in conjunction with Lucas regulator unit model RB340. A fan, integral with the driving pulley, draws cooling air through the generator, inlet and outlet holes being provided in the end brackets of the unit.

The output of the generator is controlled by the regulator unit and is dependent on the state of charge of the battery and the loading of the electrical equipment in use. When the battery is in a low state of charge, the generator gives a high output, whereas if the battery is fully charged, the generator gives only sufficient output to keep the battery in good condition without any possibility of over-charging. An increase in output is given to balance the current taken by lamps and other accessories when in use.

2. ROUTINE MAINTENANCE

(a) **Lubrication**

Every 5,000 miles, inject a few drops of high quality viscosity (S.A.E. 30) engine oil into the hole marked "OIL" at the end of the C.E. bracket bearing housing.

(b) **Inspection of Brushgear**

Every 24,000 miles the generator should be removed from the engine and the brushgear checked as detailed in paragraph 4c.

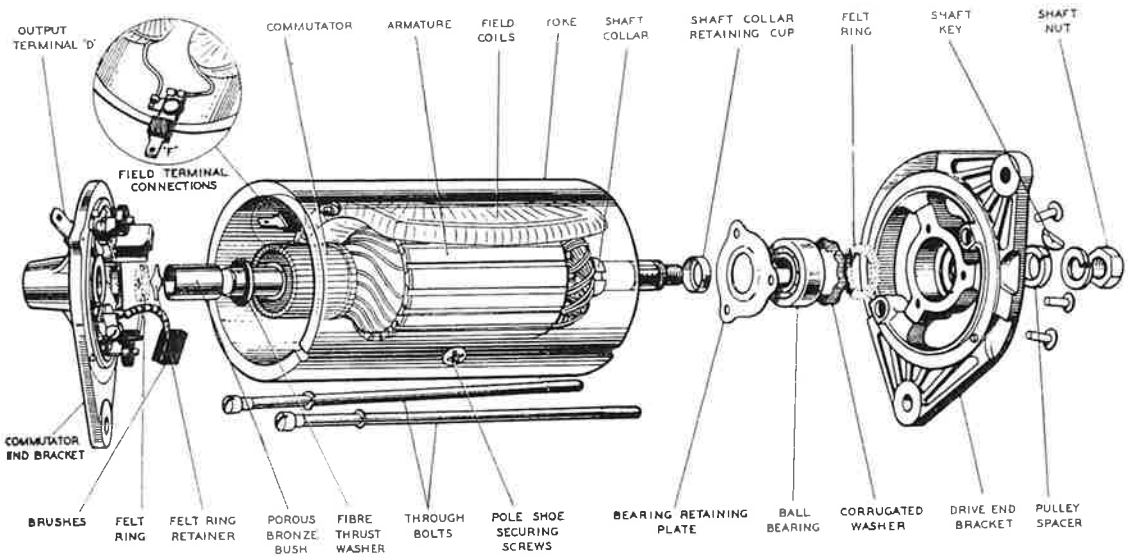

Fig. 9. Exploded view of Model C42 generator.

(c) **Belt Adjustment**

Occasionally inspect the generator driving belt and, if necessary, adjust to take up any undue slackness by turning the generator on its mounting. Care should be taken to avoid over-tightening the belt, the tension needed being just enough to drive without slipping. See that the machine is properly aligned, otherwise undue strain will be thrown on the generator bearings.

3. PERFORMANCE DATA

Cutting-in Speed	1,250 r.p.m. (max.) at 13·0 generator volts.
Maximum Output	30 amps at 2,200 r.p.m. (max.) at 13·5 generator volts.
Field Resistance	4·5 ohms.

4. SERVICING

(a) **Testing in position to Locate Fault in Charging Circuit**

In the event of a fault in the charging circuit, adopt the following procedure to locate the cause of the trouble.

i. Inspect the driving belt and adjust if necessary (see Paragraph 2c).

ii. Check the connections on the commutator end bracket. The larger connector carries the main generator output, the smaller connector the field current.

iii. Pull off the connectors from the terminal blades of the generator and connect the two terminal blades with a short length of wire.

iv. Start the engine and set to run at normal idling speed.

v. Clip the negative lead of a moving coil type voltmeter, calibrated 0—20 volts, to one generator terminal and the positive lead to a good earthing point on the yoke.

vi. Gradually increase the engine speed, when the voltmeter reading should rise rapidly and without fluctuation. Do not allow the voltmeter reading to reach 20 volts and do not race the engine in an attempt to increase the voltage. It is sufficient to run the generator up to a speed of 1,000 r.p.m.

If the voltage does not rise rapidly and without fluctuation the unit must be dismantled (see Paragraph 4b) for internal examination.

Excessive sparking at the commutator in the above test indicates a defective armature which should be replaced.

NOTE : If a radio suppression capacitor is fitted between the output terminal and earth, disconnect this capacitor and re-test the generator before dismantling. If a reading is now given on the voltmeter, the capacitor is defective and must be replaced.

If the generator is in good order, remove the link from between the terminals and restore the original connections.

(b) **To Dismantle**

i. Take off the driving pulley.

ii Unscrew and withdraw the two through bolts.

iii Withdraw the commutator end bracket from the yoke.

iv. Lift the driving end bracket and armature from the yoke. Take care not to lose the fibre thrust washer or collar from the commutator end of the shaft.

v. The driving end bracket, which on removal from the yoke has withdrawn with it the armature and armature shaft ball bearing, need not be separated from the shaft unless the bearing is suspected and requires examination, or the armature is to be replaced; in this event the armature should be removed from the end bracket by means of a hand press, having first removed the shaft key.

(c) **Brushgear** (Checking with yoke removed)

i. Lift the brushes up into the brush boxes and secure them in that position by positioning the brush spring at the side of the brush.

ii. Fit the commutator end bracket over the commutator and release the brushes.

iii. Hold back each of the brush springs and move the brush by pulling gently on its flexible connector. If the movement is sluggish, remove the brush from its holder and ease the sides by lightly polishing on a smooth file. Always refit

brushes in their original positions. If the brushes are badly worn, new brushes must be fitted and bedded to the commutator. The minimum permissible length of brush is $\frac{1}{4}''$.

iv. Test the brush spring tension utilizing a spring balance. The tension needed to just lift the spring from contact with the brush with a new spring and a new brush is 33 ozs. but with a brush worn to $\frac{1}{4}''$ it may reduce to 16 ozs. Both pressures should be measured. Renew any brush spring when the tension falls below these values.

(d) **Commutator**

A commutator in good condition will be smooth and free from pits or burned spots.

Clean the commutator with a petrol-moistened cloth. If this is ineffective carefully polish with a strip of fine glass paper while rotating the armature. To remedy a badly worn commutator, first rough turn the commutator and then undercut the insulator between the segments to a depth of $\frac{1}{32}''$. Finally, take a light skim with a very sharp (preferably diamond-tipped) tool. If a non-diamond tipped tool is used for machining, the commutator should be lightly polished with a very fine glass paper. Emery cloth must not be used on the commutator. Finally clean away any dust.

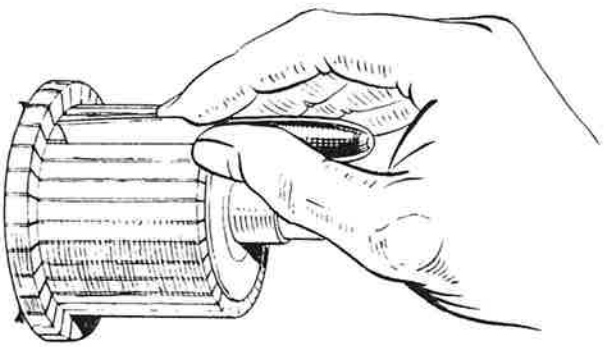

Fig. 10. Undercutting the commutator insulation.

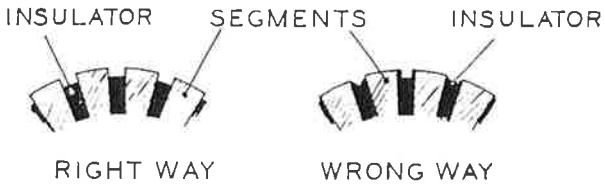

Fig. 11. Showing the correct and incorrect way of undercutting the commutator insulation.

(e) **Armature**

Indication of an open-circuited armature winding will be given by burnt commutator segments. If armature testing facilities are not available, an armature can be checked by substitution. To separate the armature shaft from the drive end bracket, press the shaft out of the drive end bracket bearing.

When fitting the new armature, support the inner journal of the ball bearing, using a mild steel tube of suitable diameter, whilst pressing the armature shaft firmly home (see also paragraph 4h).

(f) **Field Coils**

Measure the resistance of the field coils, without removing them from the generator yoke, by means of an ohm meter connected between the field terminal and the yoke. Field resistance is 4·5 ohms.

If an ohm meter is not available, connect a 12 volt d.c. supply between the field terminal and generator yoke with an ammeter in series. The ammeter reading should be approximately 2·7 amperes. Zero reading on the ammeter or an "Infinity" ohm meter indicates an open circuit in the field winding.

If the current reading is much more than 2·7 amperes, or the ohm meter reading much below 4·5 ohms, it is an indication that the insulation of one of the field coils has broken down.

In either event, unless a substitute generator is available, the field coils must be replaced. To do this, carry out the procedure outlined below:

i. Drill out the rivet securing the field coil terminal assembly to the yoke and remove the insulating sleeve from the terminal block to protect it from the heat of soldering. Unsolder the terminal blade and earthing eyelet.

ii. Remove the insulation piece which is provided to prevent the junction of the field coils from contacting with the yoke.

iii. Mark the yoke and pole shoes so that the latter can be refitted in their original positions.

iv. Unscrew the two pole shoe retaining screws by means of a wheel-operated screwdriver.

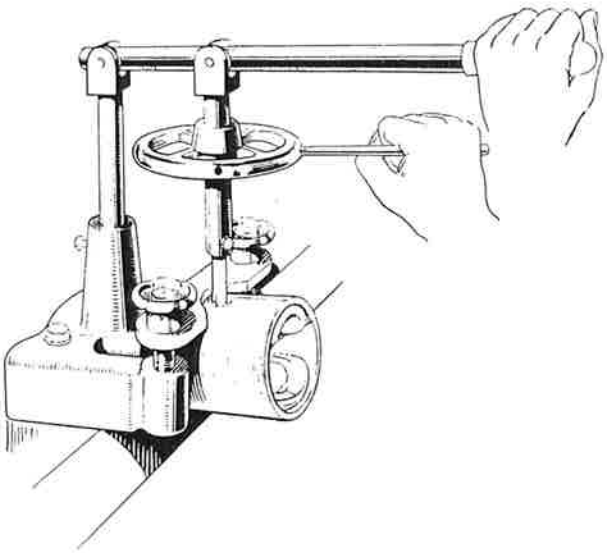

Fig. 12. Tightening the pole shoe retaining screws.

v. Draw the pole shoes and coils out of the yoke and lift off the coils.

vi. Fit the new field coils over the pole shoes and place them in position inside the yoke. Take care to ensure that the taping of the field coils is not trapped between the pole shoes and the yoke.

vii. Locate the pole shoes and field coils by lightly tightening the fixing screws.

viii. Fully tighten the screws by means of the wheel-operated screwdriver.

ix. Solder the original terminal blade and earthing eyelet to the appropriate coil ends.

x. Refit the insulating sleeve and re-rivet the terminal assembly to the yoke.

xi. Refit the insulation piece behind the junction of the two coils.

(g) **Bearings**

Bearings which are worn to such an extent that they will allow side movement of the armature shaft must be replaced.

To replace the bearing bush in a commutator end bracket, proceed as follows:—

i. Remove the old bearing bush from the end bracket. The bearing can be withdrawn with a suitable extractor or by screwing a $\frac{5}{8}''$ tap into the bush for a few turns and pulling out the bush with the tap. Screw the tap squarely into the bush to avoid damage to the bracket.

ii. Withdraw and clean the felt retainer and felt ring.

iii. Insert the felt ring and felt ring retainer in the bearing housing, then press the new bearing bush into the end bracket, using a self-extracting tool as illustrated, the fitting pin or mandrel portion being of 0·5924″ diameter and highly polished. To withdraw the pin after pressing

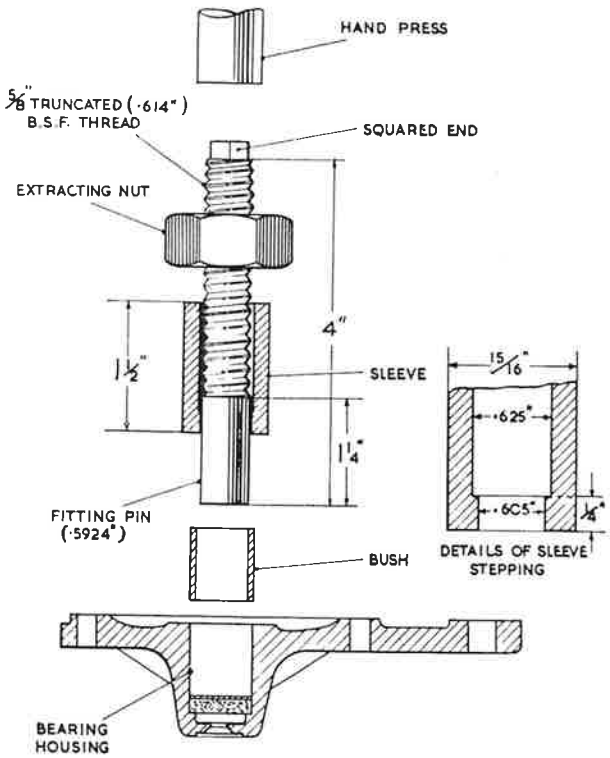

Fig. 13. Method of fitting the porous bronze bush.

the bush fully home, turn the nut against the sleeve while gripping the squared end of the fitting pin.
Porous bronze bushes must not be opened out after fitting, or the porosity of the bush may be impaired.

Note: Before fitting the new bearing bush, it should be allowed to stand for 24 hours completely immersed in a good grade S.A.E. 30 engine oil; this will allow the pores of the bush to be filled with lubricant.
The ball bearing at the driving end is replaced as follows:—

i. Drill out the rivets which secure the bearing retaining plate to the end bracket and remove the plate.

ii. Press the bearing out of the end bracket. Remove and clean the corrugated washer and felt ring.

iii. Before fitting the replacement bearing, see that it is clean and pack it with high melting point grease such as Energrease RBB3.

iv. Place the felt ring and corrugated washer in the bearing housing in the end bracket.

v. Locate the bearing in the housing and press it home.

vi. Fit the bearing retaining plate. Insert the new rivets from the pulley side of the end bracket and open the rivets by means of a punch to secure the plate rigidly in position.

(h) **To Re-assemble**

i. Fit the drive end bracket to the armature shaft. The inner journal of the bearing must be supported by a tube, approximately 4″ long $\frac{1}{8}$″ thick and internal diameter $\frac{5}{8}$″. Do not use the drive end bracket as a support for the bearing whilst fitting an armature.

ii. Fit the yoke to the drive end bracket.

iii. Lift the brushes up into the brush boxes and secure them in that position by positioning each brush spring at the side of its brush.

iv. Fit the fibre thrust washer on the shaft. Fit the commutator end bracket to the yoke, so that the dowel on the bracket locates with the groove on the yoke. Take care not to trap the brush connector pigtails. Insert a thin screwdriver through the ventilator apertures adjacent to the brush boxes and carefully lever up the spring arms until the bushes locate correctly on the commutator.

v. Refit the two through bolts, pulley spacer and shaft key.

vi. After reassembly, lubricate the commutator end bearing (see Paragraph 2a).

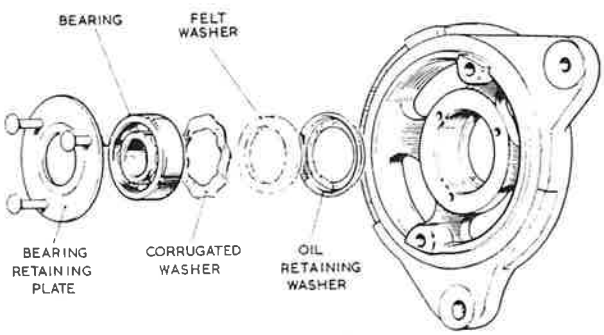

Fig. 14. Exploded view of drive and bearing.

GENERATOR — MODEL C.45 PVS-6

(Fitted to early "E" Type models)

REMOVAL

Disconnect the cables from the two terminals at the rear of the dynamo noting that they are of different sizes.

Remove the nut and bolt securing the adjusting link to the dynamo.

Remove the two nuts and bolts securing the dynamo to the mounting bracket when the dynamo can be lifted out.

Remove the dynamo belt.

REFITTING

Refitting is the reverse of the removal procedure. When the dynamo belt has been refitted, move the dynamo to a position where it is possible to depress the belt about ½" (12 mm.) midway between water pump and dynamo pulleys.

While the generator has different dimensions and performance from Model C42 previously described, its construction is similar, and the same servicing procedure applied in general. The essential differences between the two generators concern:—

(i) Performance.
(ii) Brushgear inspection.
(iii) Commutator end bearing.

PERFORMANCE

Cutting-in Speed	1,300 (max.) r.p.m. at 13·0 generator volts.
Maximum Output	25 amperes at 2,050 (max.) r.p.m. at 13·5 generator volts.
Field Resistance	6·0 ohms.

BRUSHGEAR INSPECTION

The yoke is provided with "windows" and a band cover. The instructions given for model C42 under paragraph 4c (i-iii) need not, therefore, be followed in order to gain access to the brushes for inspection and spring testing—it being only necessary to slacken a single clamping screw and release the band cover. Minimum permissible brush length is $\frac{11}{32}$". Brush spring tesion 28 ozs. with new brush, 20 ozs. with brush worn to $\frac{11}{32}$".

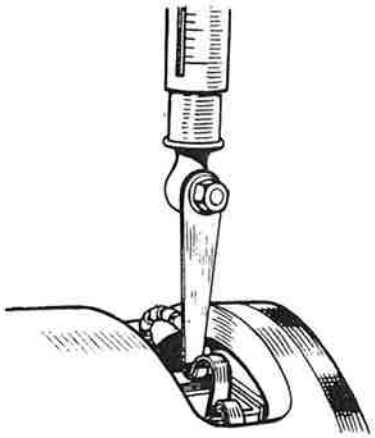

Fig. 15. Testing the brush spring tension.

COMMUTATOR END BEARING

A ball bearing is fitted at the commutator end of the armature shaft. Details are shown in the illustration. The bearing is secured to the shaft by a thrust screw and can be withdrawn with an extractor after the screw has been removed.

When replacing a defective bearing see that the new bearing is clean and packed with high melting point grease. It must be pressed home against the shoulder on the shaft and secured with the thrust screw.

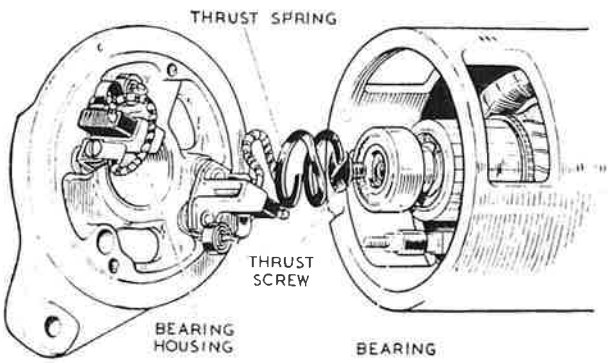

Fig. 16. Showing the end plate removed.

HORNS

It is important to keep the horn mounting bolts tight and to maintain rigid the mountings of any units fitted near the horns. Electrical connections and cables should be checked occasionally and rectified as required.

REMOVAL

Remove the six screws securing the headlight rim, remove the rim, rubber seal and headlight glass. Remove the three screws securing the headlight duct to the diaphragm panel and withdraw the duct forwards through the headlight glass aperture. The horn may now be seen through the aperture. Remove the two securing nuts and bolts, remove the cover from the horn by unscrewing the central screw and detach the wires. The horn may now be withdrawn.

ADJUSTMENT

Adjustment is effected after removal of the domed cover by means of the fixed contact screw.

Connect a 0—20 first grade moving coil ammeter in series with horn. Release contact locknut and adjust contact until horn will pass 13—15 amperes at 12 volts. Retighten locknut and check.

Refit domed cover.

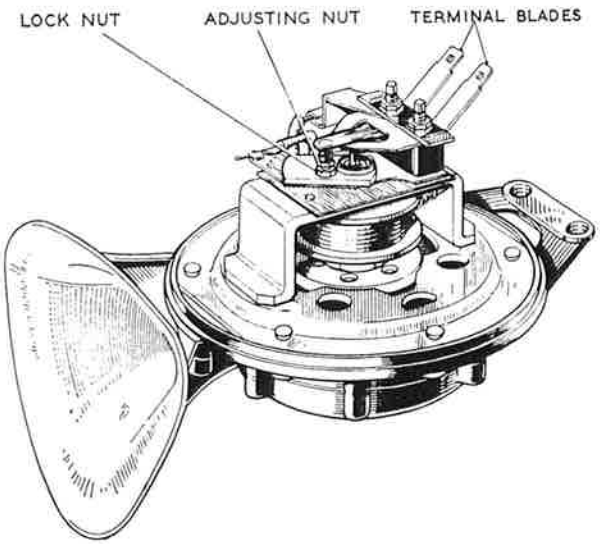

Fig. 17. The horn adjustment screw.

LAMPS

LIGHT BULBS

LAMP	LUCAS BULB NUMBER	VOLTS	WATTS	APPLICATION
Head	416	12	60/40	Home and R.H. Drive Export
	417	12	60/40	L.H. Drive Export
	410	12	45/40	European Continental
(Yellow)	411	12	45/40	France
		Sealed beam unit		U.S.A. and Canada
Side	989	12	6	
Front and Rear Flashing Indicators	382	12	21	
Rear/Brake	380	12	21/6	
Interior Lights	382	12	21	Open 2 Seater
	989	12	6	Fixed Head Coupe
Map Light	989	12	6	
Instrument Illumination Headlamp Warning Light Ignition Warning Light Fuel Level Warning Light Handbrake/Brake Fluid Warning Light Mixture Control Warning Light	987	12	2·2	
Switch Indicator Strip Flashing Indicator Warning Light	281	12	2	

HEADLAMPS

The headlamps comprise two Lucas light units with pre-focus double-filament bulbs (excepting U.S.A., export models, which are provided with an adaptor to accept American Sealed Beam Units) front rims and dust excluding rubber rings.

Since the spread of light and its position on the kerbside in the dipped position is a function of lensing and bulb design, special light units and bulbs are fitted to suit lighting regulations of the country in which a car is used. Special care should therefore be taken when replacing a bulb to see that the correct replacement is fitted.

Bulb Replacement

Remove the six screws holding glass headlamp cover retaining ring to wing. Remove ring and rubber ring now exposed. Remove glass cover.

Release the three cross-headed screws retaining headlamp glass and reflector unit rim and remove rim by turning in an anti-clockwise direction.

Note: It is not necessary to remove screws completely.

Light unit can now be withdrawn.

Remove plug with attached cables from unit. Release bulb retaining spring clips and withdraw bulb.

Replace with bulb of correct type. When re-assembling note that a groove in the bulb plate must register with a raised portion on the bulb retainer.

Replace spring clips and refit light unit assembly.

Refit retaining ring by turning in a clockwise direction and tighten the three cross-headed screws.

Note: Do not turn the two slotted screws or the setting of the headlamp will be upset.

Refit glass cover and retaining ring with rubber seal.

Headlamp Setting

The headlamps should be set so that when the car is carrying its normal load the driving beams are projected parallel with each other and parallel with the ground (see Fig.19).

When setting remove glass cover retaining ring rubber seal and glass cover. Cover one lamp whilst adjusting the other.

The setting of the beams are adjusted by the two slotted screws, one being located at the bottom centre and the other one at centre right-hand side. The bottom screw is for vertical adjustment, the side screw being for horizontal. After adjustment replace glass cover and retaining ring with rubber seal.

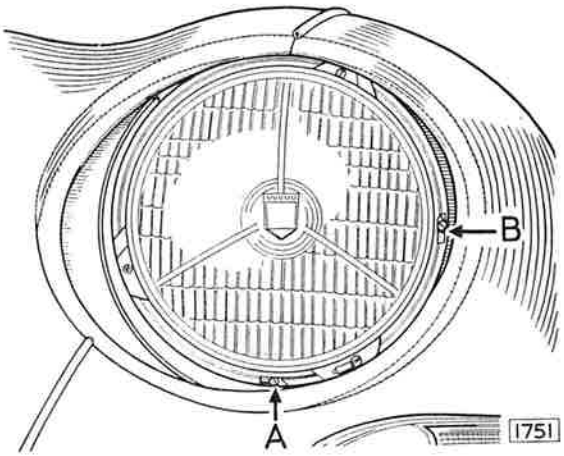

Fig. 19. Adjustment of the screw 'A' will alter the headlamp beam in the vertical plane; adjustment of the screw 'B' will alter the beam in the horizontal plane.

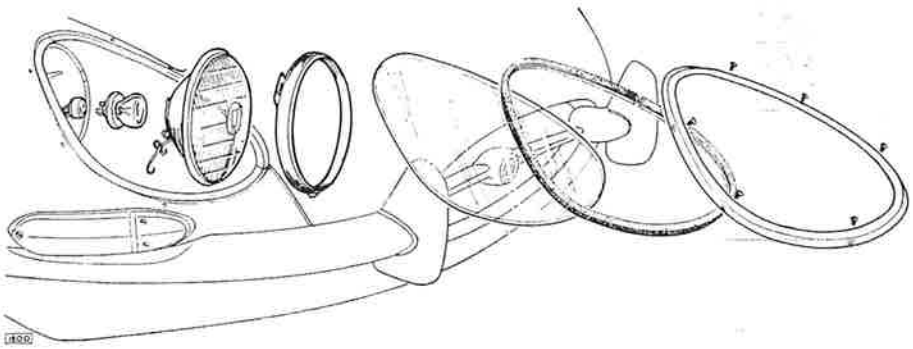

Fig. 18. Headlamp bulb removal.

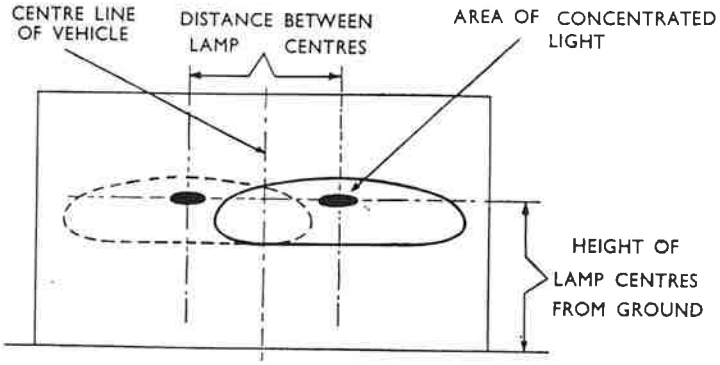

(A) FRONT OF VEHICLE TO BE SQUARE WITH SCREEN

(B) VEHICLE TO BE LOADED AND STANDING ON LEVEL GROUND

(C) RECOMMENDED DISTANCE FOR SETTING IS AT LEAST 25FT.

(D) FOR EASE OF SETTING ONE HEADLAMP SHOULD BE COVERED

1745

Fig. 20. Headlamp beam setting.

Sidelamp Bulb—Replacement

Remove the three screws retaining the lamp glass and remove glass. The sidelamp bulb is the inner one of the two exposed and is removed by pressing inwards and turning anti-clockwise.

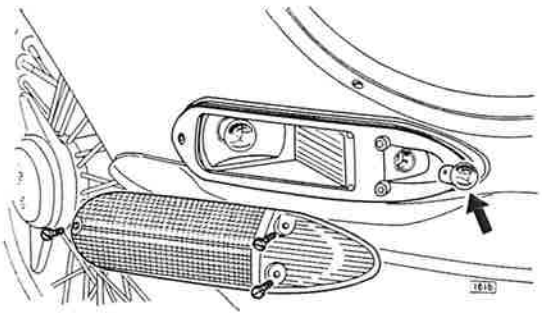

Fig. 21. Sidelamp bulb removal.

Front Flasher Bulb—Replacement

Proceed as for the sidelamp bulb. The flasher bulb is the outer one of the two exposed.

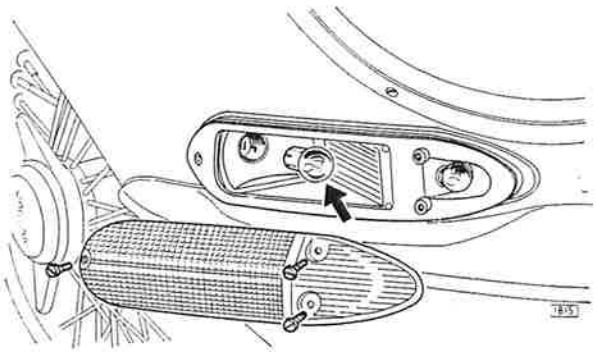

Fig. 22. Front flasher bulb removal.

Rear/Brake Bulb—Replacement

Remove the two screws retaining the lamp glass and remove glass. The rear/brake bulb is the inner one of the two bulbs exposed and is removed by pressing inwards and turning anti-clockwise. When fitting a replacement bulb note that the pins are offset.

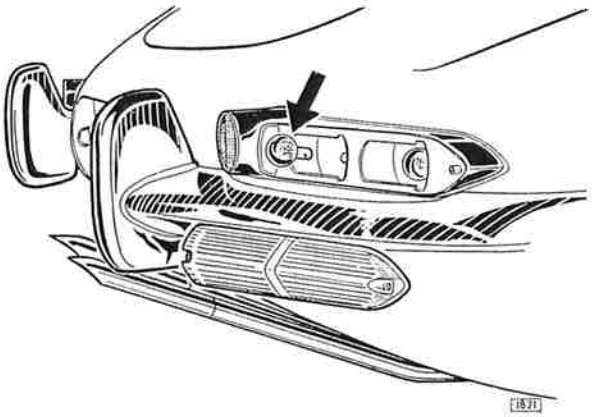

Fig. 23. Rear/brake bulb removal.

Rear Flasher Bulb—Replacement

Proceed as for rear/brake bulb. The flasher bulb is the outer one of the two exposed.

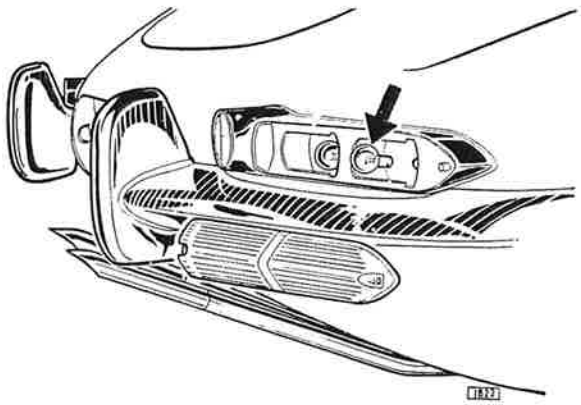

Fig. 24. Rear flasher bulb removal.

Number Plate Lamp Bulb—Replacement

Remove the fixing screw retaining rim and lamp glass and detach glass rim and gasket. Remove bulb by pressing inwards and turning anti-clockwise.

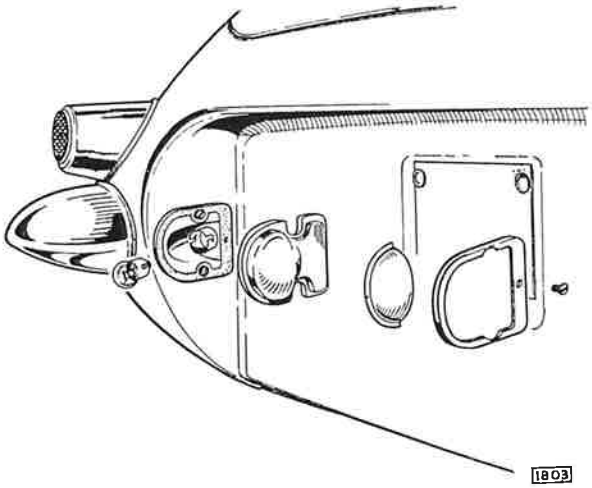

Fig. 25. Number plate lamp bulb removal.

Interior—Luggage Lamp Bulb—Replacement

The interior—luggage lamp bulb is retained in a holder accessible when the boot lid is raised. To remove bulb from its holder press inwards and turn anti-clockwise.

Reverse Lamp Bulb—Replacement

Remove the two screws retaining the lamp glass and detach the glass and gasket. Remove the bulb by pressing and rotating in an anti-clockwise direction.

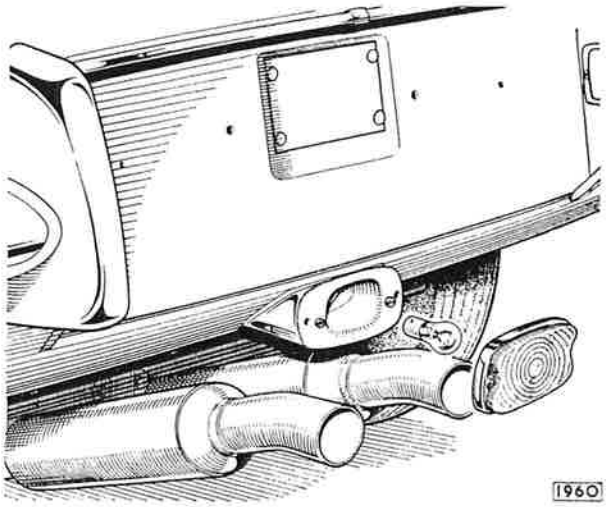

Fig. 26. Reverse lamp bulb removal.

RB 310 CURRENT—VOLTAGE REGULATOR

(Fitted to early "E" type models to control generator C45 PV-6)

(a) CHECKING CONTINUITY BETWEEN BATTERY AND CONTROL BOX

If the generator and battery are in order, disconnect the cables from control box terminal blades 'B' and connect them to the negative terminal of a good quality 0—20 moving coil voltmeter.

Connect the positive terminal of the voltmeter to an earthing point on the chassis. If the meter registers battery voltage, i.e. 12 volts, the wiring is in order and the control box settings should be checked.

If there is no reading, re-connect the cables to terminal blades 'B' and examine the wiring between battery, ammeter, and control box for defective cables or loose connections.

(b) VOLTAGE REGULATOR ADJUSTMENT

The regulator is carefully set during manufacture and, in general, it should not be necessary to make further adjustment. However, if the battery fails to keep in a charged condition or if the generator output does not fall when the battery is fully charged, the setting should be checked and, if necessary, corrected.

It is important to check before altering the regulator setting that the low state of charge of the battery is not due to a defective battery or to slipping of the generator belt. Only a good quality MOVING COIL VOLTMETER (0—20 volts) must be used when checking the regulator. The open circuit setting can be checked without removing the cover from the control box.

Disconnect the cables from the control box terminal blades 'B' and join the ignition and battery feeds together using a suitable "jumper lead".

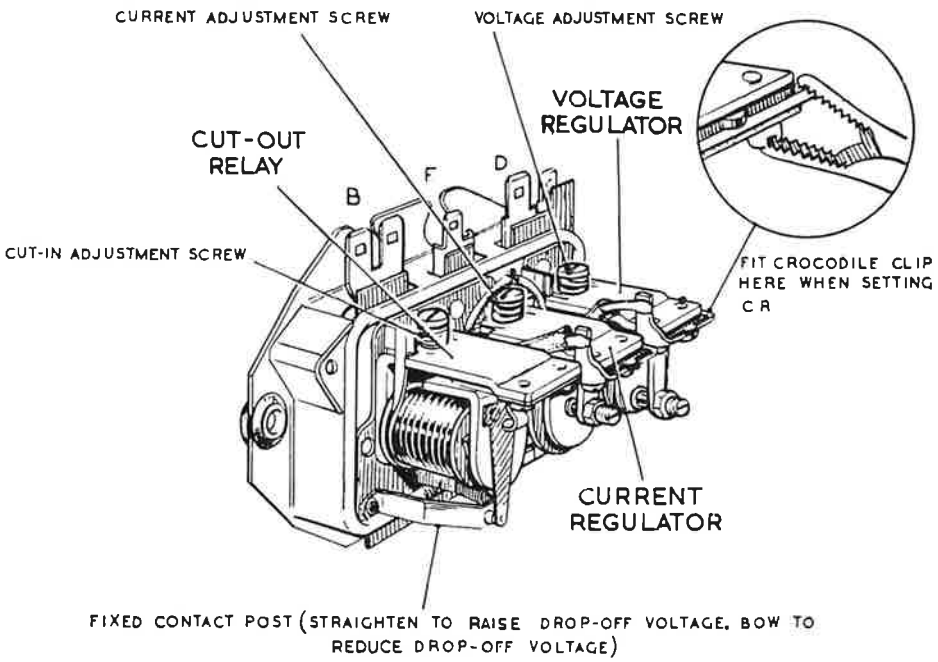

Fig. 27. The RB.310 control box showing the position of the three spring loaded adjusting screws.

Connect the voltmeter to control box terminal 'D' and a good earthing point.

The regulator should be at ambient temperature, i.e. as measured in its immediate vicinity, and adjustment should be completed within thirty seconds, otherwise heating of the shunt coil by the energising current may cause false settings to be made.

Run the engine up until the generator speed reaches 3,000 r.p.m. (2,000 engine r.p.m.) when the open circuit voltage reading should lie within the following limits:—

Ambient Temperature	Open Circuit Voltage Setting
10°C. (50°F.)	15·1—15·7
20°C. (68°F.)	14·9—15·5
30°C. (86°F.)	14·7—15·3
40°C. (104°F.)	14·5—15·1

If the voltmeter reading is outside the specified limits rotate the voltage regulator adjusting screw, which is adjacent to the 'D' terminal, clockwise, to raise the setting or anti-clockwise to reduce the setting. Check the setting by switching off the engine, restarting and then raising the generator speed to 3,000 r.p.m. (2,000 engine r.p.m.) and make any final adjustment.

(c) CURRENT REGULATOR ADJUSTMENT

When setting the current regulator on the vehicle, the generator must be made to develop its full rated output, regardless of the state of charge of the battery at the time of setting. The voltage regulator must therefore be rendered inoperative. To do this, the voltage regulator contact should be short-circuited with a crocodile or bulldog clip placed between the insulated fixed contact bracket and the voltage regulator frame.

Disconnect the cables from terminal blades 'B' and, using a suitable "jumper lead" connect a 0—40 first grade moving coil ammeter between these cables and terminal blades 'B'.

Start the engine and run the generator at about 4,000 r.p.m. (2,700 engine r.p.m.) when the ammeter should read 24—26 amperes. If the ammeter is outside the specified limit rotate the current adjusting screw, which is the centre of the three, clockwise to raise the setting or anti-clockwise to reduce the setting. Check the setting by switching off the engine, restarting and then raising the generator speed to 4,000 r.p.m. (2,700 r.p.m.) and make any final adjustment.

Restore the original connections.

(d) CLEANING REGULATOR CONTACTS

After long periods of service it may be found necessary to clean the contacts of the voltage and current regulators. These may be cleaned with silicon carbide paper, fine carborundum stone or fine emery cloth. All traces of metal dust or other foreign matter must be removed with methylated spirits (denatured alcohol).

(e) CUT-OUT ADJUSTMENT

If the regulator is correctly set but the battery is still not being charged, the cut-out may be out of adjustment.

i. **Method of Setting Cut-in Voltage**

Partially withdraw the Lucar cable connector from control box terminal blade 'D'.

Connect a first-grade 0—20 volt moving coil voltmeter between the exposed portion of terminal blade 'D' and a good earthing point, taking care not to short-circuit terminal 'D' to the base.

Start the engine and slowly increase the speed, while observing the voltmeter pointer. The voltage should rise steadily and then drop slightly at the instant of contact closure. The cut-in voltage is that which is indicated immediately before the pointer drops back. It should lie between the limits 12·7—13·3 volts.

Note: Should the instant of contact closure be indeterminate and difficult to ascertain, due to the cut-in and battery voltages being approximately equal, switch on the headlamps in order to depress the battery voltage. Repeat the rising voltage check, when a definite drop should be observed as contacts close.

If the cut-in voltage occurs outside the above limits, an adjustment must be made by rotating the cut-out adjusting screw, which is adjacent to the 'B' terminal blades, a fraction at a time clockwise to raise the setting or anti-clockwise to reduce the setting. Test after each adjustment by increasing the engine speed and note the voltmeter reading at the instant of contact closure. Electrical settings of the cut-out, like the voltage regulator, must be effected as quickly as possible because of temperature rise effects.

ii. **Method of Setting Drop-off Voltage**

Withdraw the cables from control box terminal blades 'B' and (to provide a battery feed to the

ignition coil) connect them together with a suitable "jumper lead".

Connect a first-grade 0—20 volt moving coil voltmeter between one of the terminal blades 'B' and a good earthing point.

Start the engine and run it up to above cut-in speed.

Slowly decelerate and observe the voltmeter pointer.

Opening of the contacts, indicated by the voltmeter pointer dropping to zero, should occur between the limits 9·5—11·0 volts. If it does not, the spring force exerted by the moving contact blade must be adjusted by altering the height of the fixed contact.

To do this, carefully straighten the legs of the fixed contact post to raise the drop-off voltage or bow them to reduce it. Repeat the test and, if necessary, re-adjust until the armature releases at the specified voltage.

(f) CLEANING CUT-OUT CONTACTS

After long periods of service it may be found necessary to clean the cut-out contacts. These may be cleaned with fine glass paper. All traces of metal dust or other foreign matter must be removed with methylated spirits (denatured alcohol).

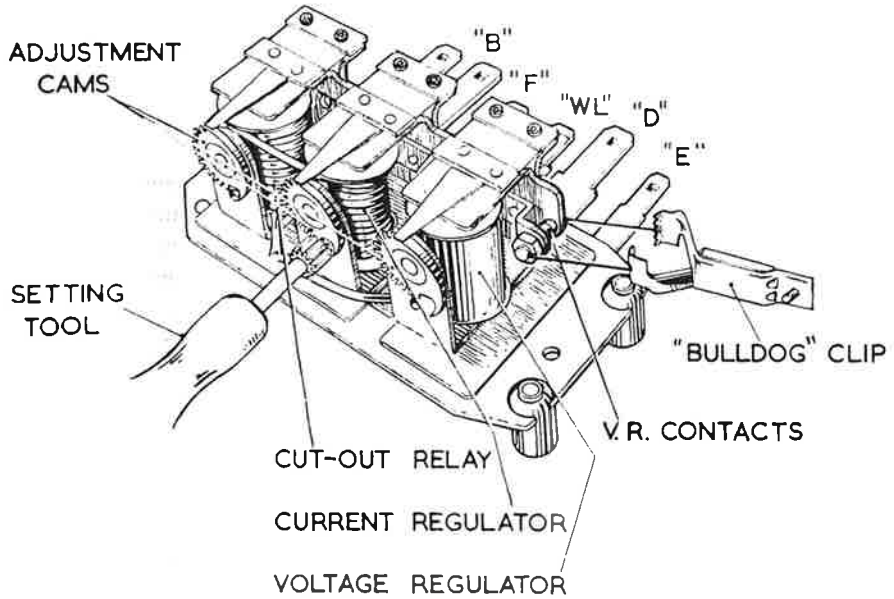

Fig. 28. The RB.340 control box showing the position of the three cam adjusters.

RB. 340 CURRENT—VOLTAGE REGULATOR

(Fitted to later "E" type models to control generator model C42)

(a) CHECKING CONTINUITY BETWEEN BATTERY AND CONTROL BOX

Instructions as given for model RB.310.

(b) VOLTAGE REGULATOR ADJUSTMENT

Instructions as given for model RB.310 except for actual setting procedure and voltage limits which are as follows:—

Using a suitable tool, turn the voltage adjustment cam until the correct setting is obtained—turning the tool clockwise to raise the setting or anti-clockwise to lower it.

Ambient Temperature	Open Circuit Voltage Setting
10°C. (50°F.)	15·0—15·6
20°C. (68°F.)	14·8—15·4
30°C. (86°F.)	14·6—15·2
40°C. (104°F.)	14·4—15·0

(c) CURRENT REGULATOR ADJUSTMENT

Instructions as given for model RB.310 except for actual setting procedure and current limits, which are as follows:—

Using a suitable tool, turn the current adjustment cam until the correct setting is obtained—turning the tool clockwise to raise the setting or anti-clockwise to lower.

Current Regulator Setting $30 \pm 1\frac{1}{2}$ amperes.

(d) CLEANING REGULATOR CONTACTS

Instructions as given for model RB.310.

(e) CUT-OUT ADJUSTMENT

Instructions as given for model RB.310 except as follows:—

i. **Method of Setting Cut-in Voltage**

Using a suitable tool, turn the cut-out relay adjustment cam until the correct setting is obtained —turning the tool clockwise to raise the setting or anti-clockwise to lower it.

Cut-in Voltage Setting 12·6—13·4 volts.

ii. **Method of Setting Drop-off Voltage**

between the limits 9·25—11·25 volts.

To do this, carefully bend the fixed contact bracket. Closing the gap will raise the drop-off voltage. Opening the gap will reduce the drop-off voltage.

(f) CLEANING CUT-OUT CONTACTS

After long periods of service it may be found necessary to clean the cut-out contacts. These may be cleaned with fine glass paper. All traces of metal dust or other foreign matter must be removed with methylated spirits (denatured alcohol).

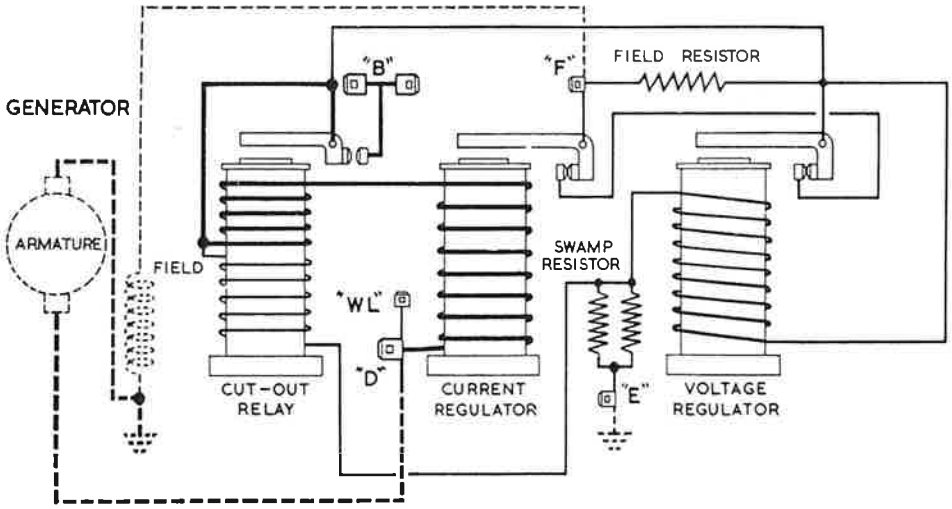

Fig. 29. The circuit diagram of the RB.340 control box.

STARTER MOTOR

REMOVAL

Detach the earth lead from the battery. Disconnect the cable from the terminal at the end of the starter motor.

Release the clips and detach the two rubber hose pipes from the brake servo vacuum situated on the bulkhead above the starter motor (Note hose pipe connections for later fitting).

Remove the four nuts and washers retaining vacuum tank to bulkhead and remove tank.

Remove the two nuts from the rear ends of the starter motor securing bolts. Support starter motor from below by hand and withdraw both bolts.

Withdraw starter motor through chassis frame.

REFITTING

Refitting is the reverse of the removal procedure. Care must be taken when reconnecting to ensure that the vacuum tank hoses are fitted to the correct unions. Refer to Section L "Brakes" before making connections.

1. GENERAL

The electric starting motor is a four-pole, four-brush machine having an extended shaft which carries the engine engagement gear, or starter drive as it is more usually named. The diameter of the yoke is $4\frac{1}{2}''$.

The starting motor is of similar construction to the generator except that heavier copper wire is used in the construction of the armature and field coils. The field coils are series parallel connected between the field terminal and the insulated pair of brushes.

2. ROUTINE MAINTENANCE

The only maintenance normally required by the starting motor is the occasional checking of brush-gear and commutator. About every 10,000 miles, remove the metal band cover. Check that the brushes move freely in their holders by holding back the brush springs and pulling gently on the flexible connectors. If a brush is inclined to stick, remove it from its holder and clean its sides with a petrol moistened cloth. Be careful to replace brushes in their original positions in order to retain "bedding". Brushes which have worn so that they will not "bed" properly on the commutator or have worn less than $\frac{5}{16}''$ in length must be renewed.

The commutator should be clean, free from oil or dirt and should have a polished appearance. If it is dirty, clean it by pressing a fine dry cloth against it while the starter is turned by hand by means of a spanner applied to the squared extension of the shaft. Access to the squared shaft is gained by removing the thimble-shaped metal cover. If the commutator is very dirty moisten the cloth with petrol.

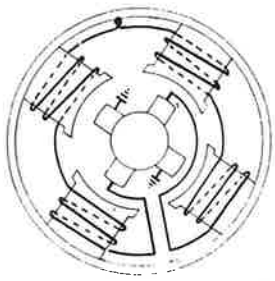

Fig. 30. Showing the internal connections of the starter motor.

3. PERFORMANCE DATA

Model	M 45 G
Lock Torque	22 lbs/ft. with 430–450 amperes at 7·8–7·4 volts.
Torque at 1,000 r.p.m.	8·3 lbs/ft. with 200–220 amperes at 10·2–9·8 volts.
Light running current	45 amperes at 5,800–6,800 r.p.m.

4. SERVICING

(a) TESTING IN POSITION

Check that the battery is fully charged and terminals are clean and tight. Recharge if necessary.

(i) Switch on the lamps and operate the starter control. If the lights go dim, but the starter motor is not heard to operate, an indication is given that the current is flowing through the starting motor windings but that the armature is not rotating for some reason; possibly the pinion is meshing permanently with the geared ring on the flywheel. In this case the starting motor must be removed from the engine for examination.

(ii) Should the lamps retain their full brilliance when the starter switch is operated, check the circuit for continuity from battery to starting motor via the starter switch, and examine the connections at these units. If the supply voltage is found to be applied to the starting motor when the switch is operated, an internal fault in the motor is indicated and the unit must be removed from the engine for examination.

(iii) Sluggish or slow action of the starting motor is usually due to a loose connection causing a high resistance in the motor circuit. Check as described above.

(iv) If the motor is heard to operate, but does not crank the engine, indication is given of damage to the drive.

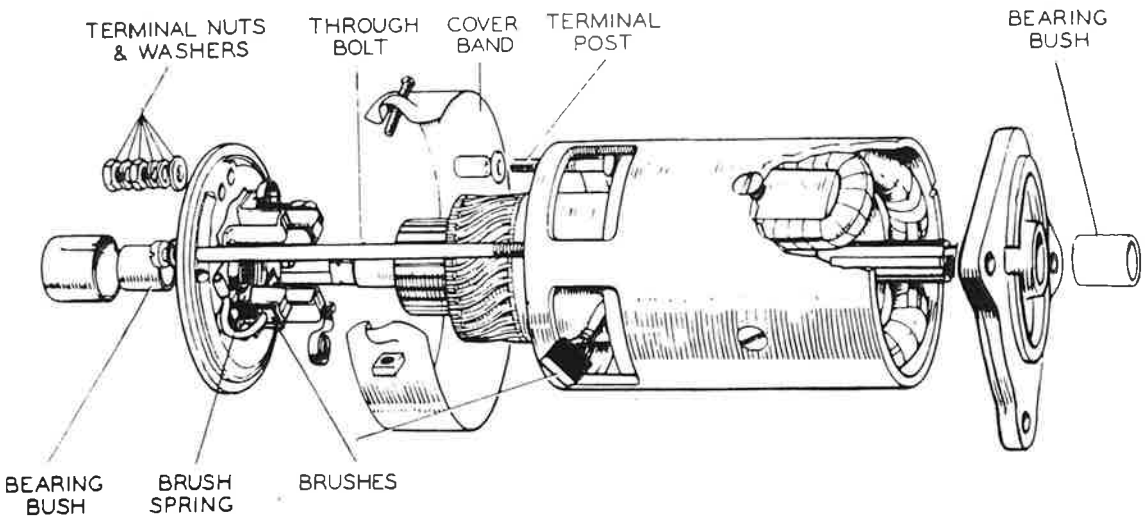

Fig. 31. Exploded view of the starter motor.

(b) **BENCH TESTING AND EXAMINATION OF BRUSHGEAR AND COMMUTATOR**

(i) Remove the starting motor from the engine, as described on page P.31.

(ii) After removing the starting motor from the engine secure the body in a vice and test by connecting it with heavy gauge cables to a battery of the appropriate voltage. One cable must be connected to the starter terminal and the other held against the body or end bracket. Under these light load conditions, the starter should run at a very high speed (see Paragraph 3) without excessive noise and without excessive sparking at the commutator.

(iii) If the operation of the starting motor is unsatisfactory, remove the cover band and examine the brushes and commutator. Hold back each of the brush springs and move the brush by pulling gently on its flexible connector. If the movement is sluggish, remove the brush from its holder and ease the sides by lightly polishing on a smooth file. Always replace brushes in their original positions. If the brushes are worn so that they will not bear on the commutator, or if the brush flexible is exposed on the running face, they must be replaced (see paragraph 4d).
Check the tension of the brush springs with a spring scale. The correct tension is 30—40 ozs. New springs should be fitted if the tension is low.

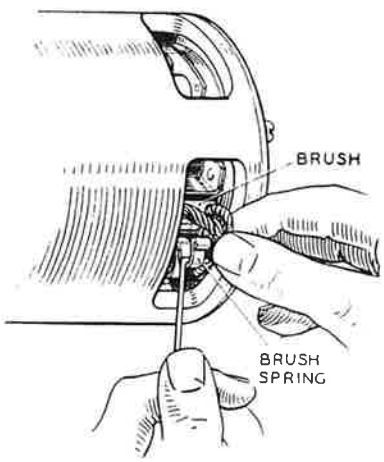

Fig. 32. Checking the brush gear.

If the commutator is blackened or dirty, clean it by holding a petrol-moistened cloth against it while the armature is rotated.

(iv) Re-test the starter as described under (ii). If the operation is still unsatisfactory, the unit can be dismantled for detailed inspection and testing as follows:—

(c) **TO DISMANTLE**

(i) Remove the cover band, hold back the brush springs and lift the brushes from their holders.

(ii) Remove the nuts from the terminal post which protrudes from the commutator end bracket.

(iii) Unscrew the two through bolts from the commutator end bracket. Remove the commutator end bracket from the yoke.

(iv) Remove the driving end bracket complete with armature and drive from the starting motor yoke. If it is necessary to remove the armature from the driving end bracket, it can be done by means of a hand press after the drive has been dismantled.

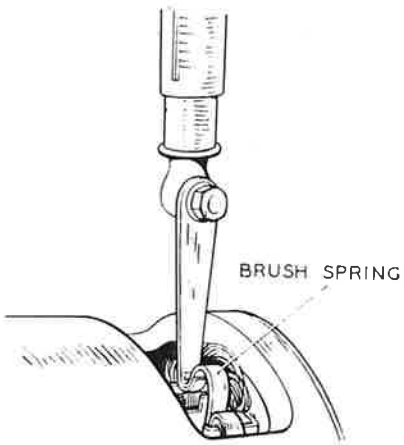

Fig. 33. Testing the brush spring tension.

(d) REPLACEMENT OF BRUSHES

If the brushes are worn to less than $\frac{5}{16}''$ in length, they must be replaced.

Two of the brushes are connected to terminal eyelets attached to the brush boxes on the commutator end bracket and two are connected to the field coils.

The flexible connectors must be removed by unsoldering and the connectors of the new brushes

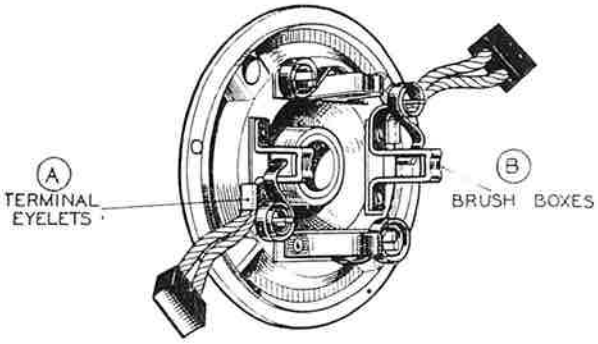

Fig. 34. The commutator end bracket brush connections.

secured in their place by soldering. The new brushes are preformed so that the bedding to the commutator is unnecessary.

(e) COMMUTATOR

A commutator in good condition will be smooth and free from pits and burned spots. Clean the commutator with a petrol-moistened cloth. If this is ineffective, carefully polish with a strip of fine glass paper, while rotating the armature. To remedy a badly worn commutator, dismantle the starter drive and remove the armature from the end bracket. Now mount the armature in a lathe, rotate at a high speed and take a light cut with a very sharp tool. Do not remove any more metal than is necessary. Finally polish with very fine glass paper.

The insulators between the commutator segments MUST NOT BE UNDERCUT.

(f) ARMATURE

Examination of the armature may reveal the cause of failure, e.g., conductors lifted from the commutator due to the starter motor being engaged while the engine is running and causing the armature to be rotated at an excessive speed. A damaged armature must always be replaced—no attempts should be made to machine the armature core or to true a distorted armature shaft.

(g) FIELD COILS

(i) Test the field coils for continuity by connecting a 12-volt test lamp between the starting motor terminal and to each field brush in turn.

(ii) Lighting of the lamp does not necessarily mean that the field coils are in order, as it is possible that one of them may be earthed to a pole-shoe or to the yoke. This may be checked with a 110-volt test lamp, the test leads being connected between the starting motor terminal and a clean part of the yoke. If the lamp lights, defective insulation of the field coils or of the terminal post is indicated. In this event, see that the insulating band is in position and examine the field coils and terminal connections for any obvious point of contact with the yoke. If from the above tests the coils are shown to be open-circuited or earthed and the point of contact cannot be readily located and rectified, either the complete starting motor or the field coils must be replaced. If the field coils are to be replaced, follow the procedure outlined below, using a wheel-operated screwdriver.

Remove the insulation piece wich is provided to prevent the intercoil connectors from contacting with the yoke.

Mark the yoke and pole shoes so that the latter can be refitted in their original positions.

Unscrew the four pole shoe retaining screws with the wheel-operated screwdriver.

Draw the pole shoes and coils out of the yoke and lift off the coils. Fit the new field coils over the pole shoes and place them in position inside the yoke.

Take care to ensure that the taping of the field coils is not trapped between the pole shoes and the yoke.

Locate the pole shoes and field coils by lightly tightening the fixing screw. Fully tighten the screws with the wheel-operated screwdriver.

Replace the insulation piece between the field coil connections and the yoke.

(h) **BEARINGS**

Bearings which are worn to such an extent that they will allow excessive side-play of the armature shaft must be replaced. To replace the bearing bushes proceed as follows:—

(i) Press the bearing bush out of the end bracket.

(ii) Press the new bearing bush into the end bracket using a shouldered, highly polished mandrel of the same diameter as the shaft which is to fit in the bearing. Porous bronze bushes must not be opened out after fitting, or the porosity of the bush may be impaired.

Note: Before fitting a new porous bronze bearing bush it must be completely immersed for 24 hours in clean thin engine oil.

(j) **REASSEMBLY**

The re-assembly of the starting motor is a reversal of the dismantling procedure.

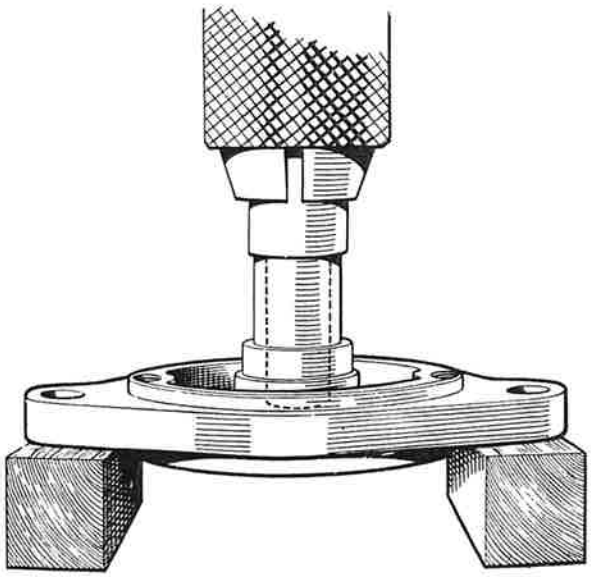

Fig. 35. Method of fitting bush.

STARTER DRIVE

1. **GENERAL**

The pinion is mounted on a threaded sleeve which is carried on splines on the armature shaft, the sleeve being arranged so that it can move along the shaft against a compression spring so as to reduce the shock loading at the moment engagement takes place.

When the starter switch is operated, the shaft and screwed sleeve rotate, and owing to the inertia of the pinion the screwed sleeve turns inside the pinion causing the latter to move along the sleeve into engagement with the flywheel ring. The starter will then turn the engine.

As soon as the engine fires and commences to run under its own power, the flywheel will be driven faster by the engine than by the starter. This will cause the pinion to be screwed back along the sleeve and so thrown out of mesh with the flywheel teeth. In this manner the drive safeguards the starter against damage due to being driven at high speeds by the engine.

A pinion restraining spring is fitted over the starter shaft to prevent the pinion being vibrated into contact with the flywheel when the engine is running.

2. **ROUTINE MAINTENANCE**

If any difficulty is experienced with the starting motor not meshing correctly with the flywheel, it may be that the drive requires cleaning. The pinion should move freely on the screwed sleeve; if there is any dirt

or other foreign matter on the sleeve it must be washed off with paraffin.

In the event of the pinion becoming jammed in mesh with the flywheel, it can usually be freed by turning the starter motor armature by means of a spanner applied to the shaft extension at the commutator end.

This is accessible by removing the cap which is a push fit.

3. DISMANTLING AND REASSEMBLY

Having removed the armature as described in the section dealing with starting motors the drive can be dismantled as follows:—

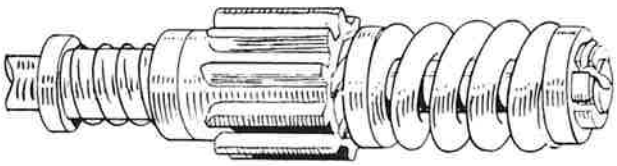

Fig. 36. Showing the starter drive assembled.

Remove the split pin (A) from the shaft nut (B) at the end of the starter drive. Hold the squared starter shaft extension at the commutator end by means of a spanner and unscrew shaft nut (B). Lift off the main spring (C), washer (D), screwed sleeve with pinion (E), collar (F), pinion restraining spring (G) and restraining spring sleeve (H).

Note: If either the screwed sleeve or pinion are worn or damaged they must be replaced as a pair, not separately.

The reassembly of the drive is a reversal of the dismantling procedure.

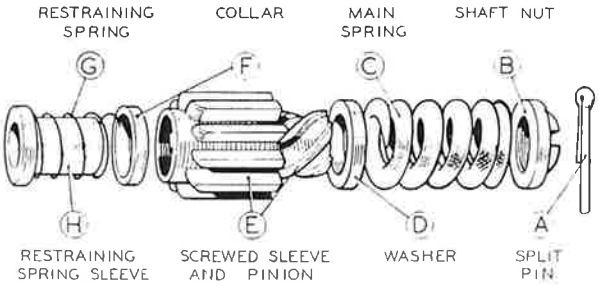

Fig. 37. Exploded view of the starter drive assembly.

WINDSCREEN WIPER

The windscreen wiper assembly consists of a two-speed motor coupled by connecting rods to three wiper spindle bearings. A control cable is attached to the centre spindle bearing mechanism for adjustment of the parking switch. The knurled adjusting knob attached to the cable is accessible in the engine compartment on the bulkhead.

Turning this control will raise or lower the parking limits of wiper arms.

REMOVAL OF WIPER MOTOR

Disconnect the battery earth cable.

Disconnect the ball joint from the throttle control shaft at the pivot bracket and remove bracket by unscrewing the two setscrews.

Release snap connector clip from bulkhead and disconnect cables. Lower the instrument panel after removing the two retaining screws in the top right hand and left hand corners and disconnect the ball

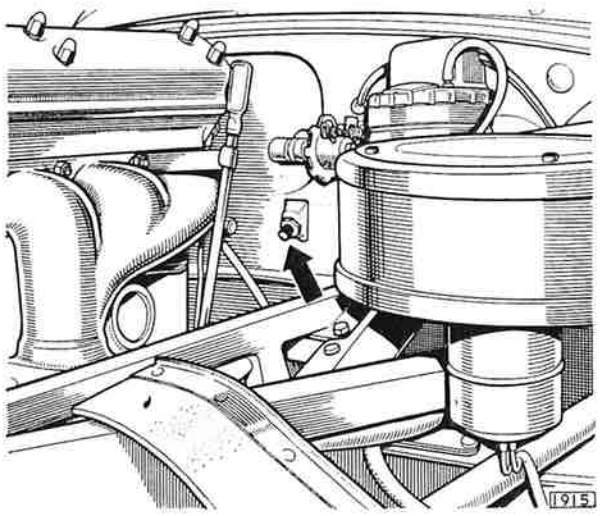

Fig. 38. The windscreen wiper parking adjuster screw.

joint from the central windscreen wiper spindle housing. Remove the four setscrews retaining the windscreen wiper motor to bulkhead and withdraw the motor complete with the attached link rod.

REFITTING

Refitting is the reverse of the removal procedure.

Note: It is essential when refitting that the length of the link rod is not altered. Any alteration in the length of this rod will place the windscreen wiper arms out of phase with each other.

When refitting the throttle control pivot bearing bracket, care must be taken that the control rod is central in its bearing. Adjustment is provided by means of the two slotted holes in the bracket.

REMOVAL OF WINDSCREEN WIPER SPINDLE HOUSINGS

The following instructions apply to right-hand drive cars; instructions for left-hand drive models are identical with the exception of the side facia panels which are in this case reversed (i.e.) the instrument facia panel being in each case on the driver's side.

REMOVAL (Right-hand or Left-hand Housings)

Disconnect battery.

Withdraw wiper arms from spindles.

Lower the centre instrument panel after removing the two retaining screws in the top right hand and top left hand corners.

Remove side facia panel (see page P.45) for the removal of right hand spindle housing or remove glove box (see page P.44) for removal of left hand spindle housing.

Disconnect the ball joint from the wiper spindle crank. From outside the car unscrew the large nut securing the spindle housing to the scuttle.

Remove the chrome distance piece and rubber seal.

From inside the car withdraw the spindle housing.

REFITTING

Refitting is the reverse of the removal procedure.

Note: It is essential when refitting that the length of the link rod is not altered. Any alteration in the length of this rod will place the windscreen wiper arms out of phase with each other. If both spindle housings are removed care must be taken to ensure when refitting that the spindle with the longer crank is fitted to the driver's side.

CENTRE HOUSING

Disconnect battery.

Withdraw wiper arm from spindle.

Lower the centre instrument panel after removing the two retaining screws in the top right-hand and top left-hand corners. Remove side facia panel (see page P.45) and glove box (see page P.44).

Disconnect the ball joints from the two outer spindle cranks.

Disconnect the two cables attached to parking switch.

Remove the nut attaching the wiper parking switch control to the engine side of the bulkhead and withdraw the control from inside the car.

From outside the car unscrew the large nut securing the centre housing to the scuttle. Remove the chrome distance piece and rubber seal.

From inside the car withdraw the housing from the scuttle.

Withdraw housing and attached rods through centre aperture in dash panel.

REFITTING

Refitting is the reverse of the removal procedure.

Note: It is essential when refitting that the length of the link rods are not altered. Any alteration in the length of these rods will place the windscreen wiper arms out of phase with each other.

DATA

	Normal	High
Wiping Speeds	44—48 Cycles/minute	58—68 Cycles/minute
Operating Currents Arms and Blades removed .. Motor only	 3·0—3·7 amp. 2·5—3·2 amp.	 2·2—2·9 amp. 1·7—2·4 amp.
Resistance of Field Coil	8·0—9·5 ohms	
Value of Field Resistor	9·5—11·0 ohms	
Pressure of Blades against Windscreen	11—13 ozs.	

DESCRIPTION

The windscreen wiper is a two-speed, thermostatically protected, self parking, link operated unit.

The link and spindle housing assembly comprises a back plate with the three attached spindle housings, the spindle housings being detachable separately from the assembly.

One control rod operates from the motor to the centre spindle and the remaining two from the centre to the two outer spindles.

The motor is controlled by a switch giving Park, Normal and High speed operation. The higher speed is intended to be used when driving fast through heavy rain or light snow. It should not be used with heavy snow or with a dry or drying windscreen.

If overloaded the motor windings will overheat and cause the thermostat to trip and isolate the motor from the supply. Possible causes include: Packed snow or ice on screen, over-frictional or oil contaminated blades, damaged drive mechanism or spindle units. Provided the obstruction or other cause of excessive heating is removed, normal working resumes automatically when the temperature falls to a safe level.

MAINTENANCE

Efficient wiping is dependent upon having a clean windscreen and wiper blades in good condition.

Use methylated spirits (denatured alcohol) to remove oil, tar spots and other stains from the windscreen. Silicone and wax polishes should not be used for this purpose.

Worn or perished wiper blades are readily removed for replacement.

When necessary, adjustments to the self-parking mechanism can be made by turning the knurled nut located on the bulkhead. Turn the nut only one or two serrations at a time and test the effect of each setting before proceeding.

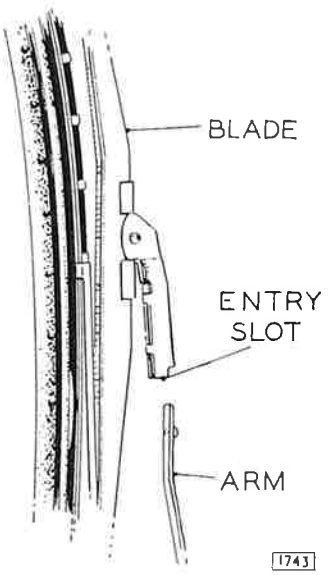

Fig. 39. Wiper blade to arm attachment.

FAULT DIAGNOSIS

Poor performance can be electrical or mechanical in origin and not necessarily due to a faulty motor, for example:

Low voltage at the motor due to poor connections or a discharged battery.

Excessive loading on the wiper blades.

Spindles binding in housings.

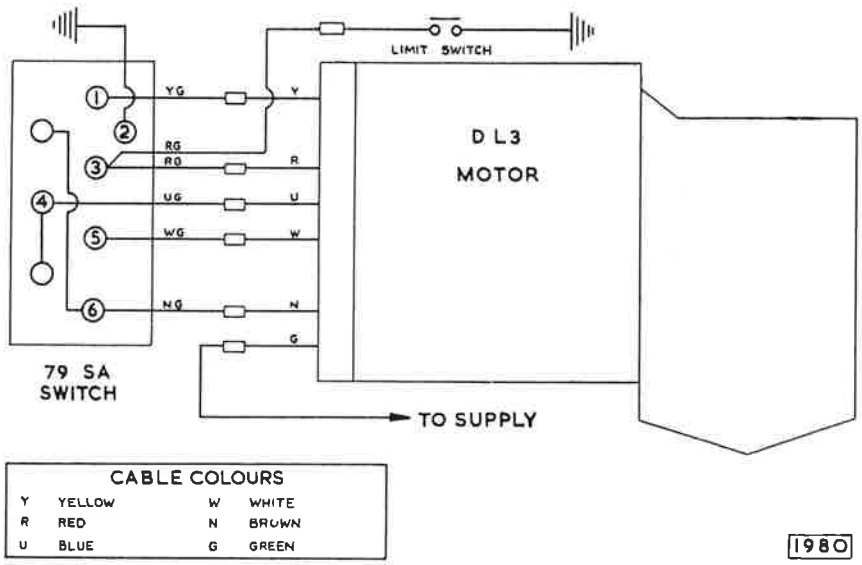

Fig. 40. Wiring connections switch to wiper.

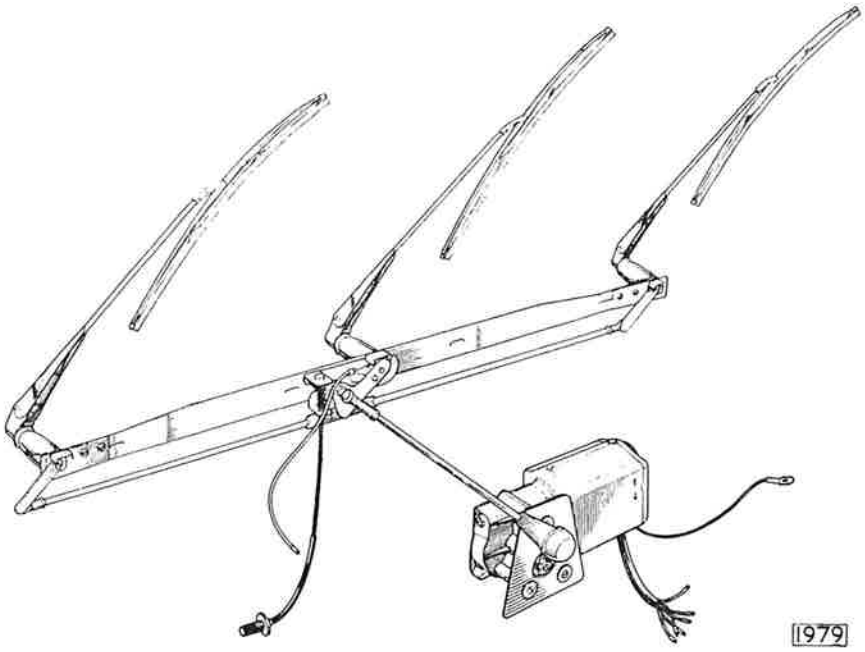

Fig. 41. The DL3 wiper motor and linkage.

TESTING

Unless the origin of the fault is apparent, proceed as follows to determine the cause of failure.

Measuring Supply Voltage

Using a first grade moving coil voltmeter, measure the voltage between the motor supply terminal (to which the green cable is connected) and a good earthing point. This should be 11·5 volts with wiper working normally. If the reading is low, check the battery, switch (by substitution), cabling and connections.

Measuring Light Running Current

If the normal terminal voltage is correct, measure the light running current by means of a first grade moving coil ammeter, connected in series withthe supply cable.

Remove the windscreen wiper arms and blades.

To Check the "Fast" Speed Current

Using a fully charged 12v battery and two test leads, connect the "GREEN" cable on the wiper motor to the "Negative" battery terminal. Join the "YELLOW" and "RED" cables together and connect to the "Positive" battery terminal. Connect the "BLUE" and "WHITE" cables together. Check the cycles per minute of the wiper spindle.

To Check the "Slow" Speed Current

Connect the "GREEN" cable to the "Negative" battery terminal.

Join the "BROWN" and "RED" cables together and connect to the "Positive" battery terminal. Connect the "BLUE AND WHITE" cables together. Check the cycles per minute of the wiper spindle.

The light running current must not exceed:

3·0—3·7 amperes at slow speed—44—48 c.p.m./or r.p.m. of output motor shaft or 2·2—2·9 amperes at fast speed—58—68 c.p.m./or r.p.m. of output motor shaft.

If the current is in excess of these figures change the motor. See DATA chart for other information.

Checking Spindle Housings

Renew seized housings.

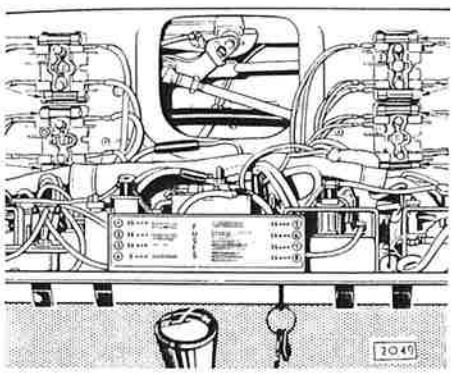

Fig. 43. The central wiper wheel box.

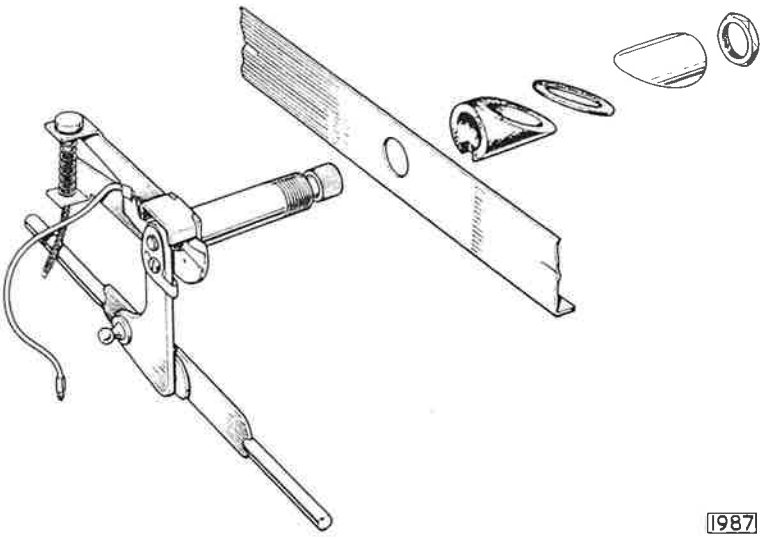

Fig. 42. Exploded view of wheel box and parking switch assembly.

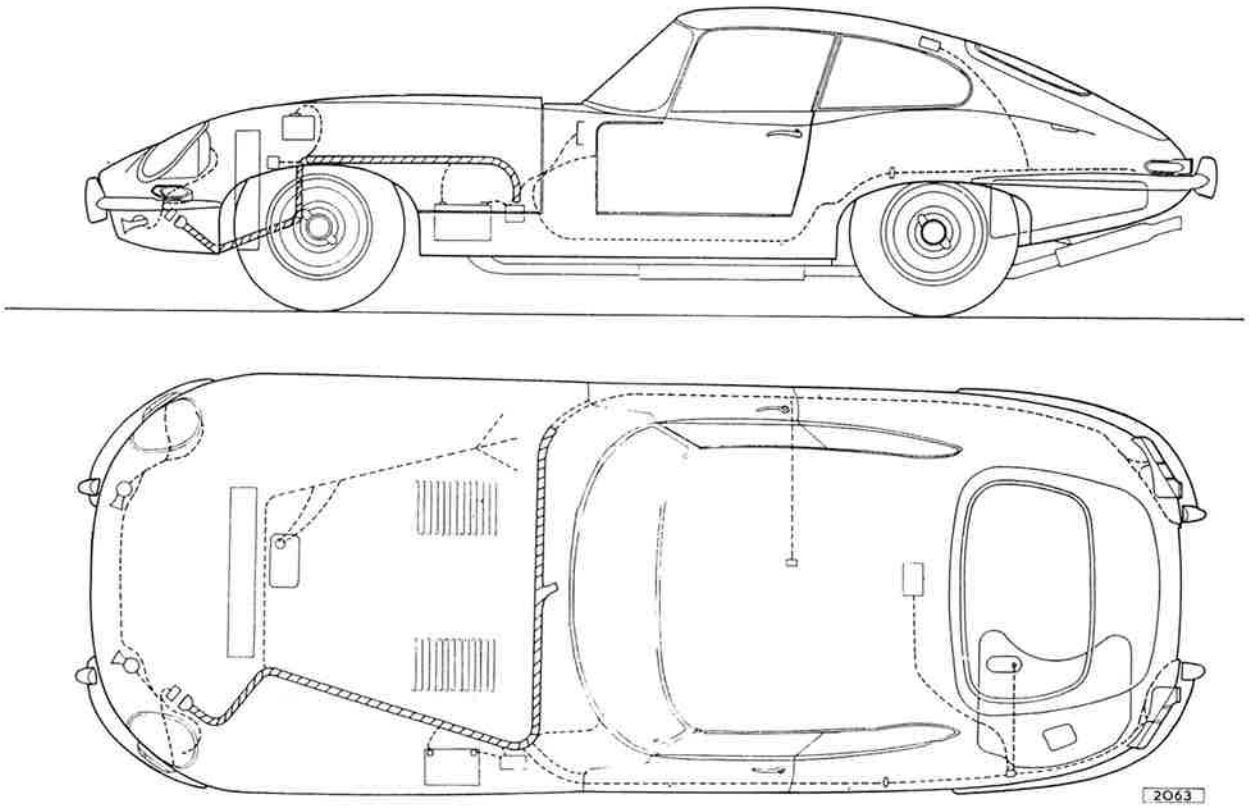

Fig. 44. The layout of wiring harnesses.

MISCELLANEOUS

ELECTRIC CLOCK

Removal

Detach the earth lead from the battery. Remove the revolution counter from the instrument panel as detailed under "Revolution Counter and Clock Removal". Detach the clock from the hidden face of the revolution counter by removing the two nuts. The flexible setting drive can be removed by slackening the knurled nut. Disconnect the cable at the snap connector.

Adjustment

Adjustment is effected by means of a small screw surrounded by a semi-circular seal, located at the back of the instrument.

If the clock is gaining turn the screw towards the minus (—) sign; if the clock is losing turn the screw towards the positive (+) sign.

Note: The action of resetting the hands automatically restarts the clock.

Refitting

Refitting is the reverse of the removal procedure.

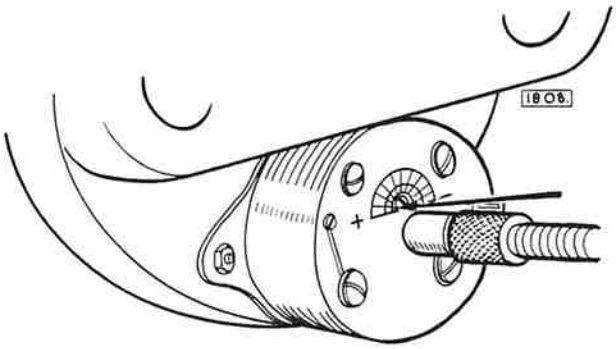

Fig. 45. Adjustment screw for clock.

ELECTRICAL AND INSTRUMENTS

BRAKE FLUID AND HANDBRAKE WARNING LIGHT

Unscrew the bezel of the lamp, exercising care to control the run of the spring loaded bulb beneath. Feed the bulb into the spring-loaded bulb holder, ensure that the red transparent window is retained in the bezel by a small circlip, position the designation plate on the bulb holder and screw on the bezel.

CARBURETTER MIXTURE CONTROL WARNING LIGHT

Renewing the Bulb

Withdraw the bulb holder from the rear of the light unit above the lever quadrant and withdraw the bulb by rotating in an anti-clockwise direction.

Replace the bulb holder and bulb by reversing the removal sequence.

The lamp unit can be removed from the side facia panel after the bulb holder has been removed by unscrewing the body of the unit and withdrawing the red plastic window from the front face of the facia board. The replacement of the lamp unit is the reverse of the removal sequence but the angle terminal bracket must not be omitted.

SETTING THE CARBURETTER MIXTURE CONTROL WARNING LIGHT SWITCH

Set the lever of the carburetter mixture control ¼" (6·350 m'm,) from the bottom limit of its travel, when a click will be heard and utilizing the two nuts on the threaded shank of the switch, position the switch so that the warning light ceases to glow when the ignition is switched "on". Actuate the lever up and down once or twice and make any final adjustments necessary.

FLASHING INDICATOR CONTROL

Removal

Detach the earth lead from the battery.

Disconnect the seven cable harness from the snap connectors situated behind the facia panel.

Remove inner half of switch cover by withdrawing towards the centre of the car; cover is retained in position by means of spring clips. Switch and outer half of cover can now be withdrawn after removing the two screws and the clamp retaining the switch to steering column. Detach the outer half of switch cover from switch by removing the two fixing screws.

Refitting

Refitting is the reverse of the removal procedure. Particular attention must be paid to ensure that the switch is positioned correctly on the steering column, that the spigot on the switch is located in the hole drilled in the steering column.

Reconnect cable harness into the multi-snap connector so that similar coloured cables are connected together.

FLASHING DIRECTION INDICATOR WARNING LIGHT BULB

Replacement

Detach the earth lead from the battery. Withdraw one or both of the bulb holders from the rear of the light unit situated between the speedometer and the revolution counter. Remove the bulb from the holder by applying an inward pressure and turning in an anti-clockwise direction.

Refitting is the reverse of the removal sequence. Care must be taken to ensure that the bulb holders are replaced in the correct position, i.e., replace right hand indicator bulb behind right hand arrow.

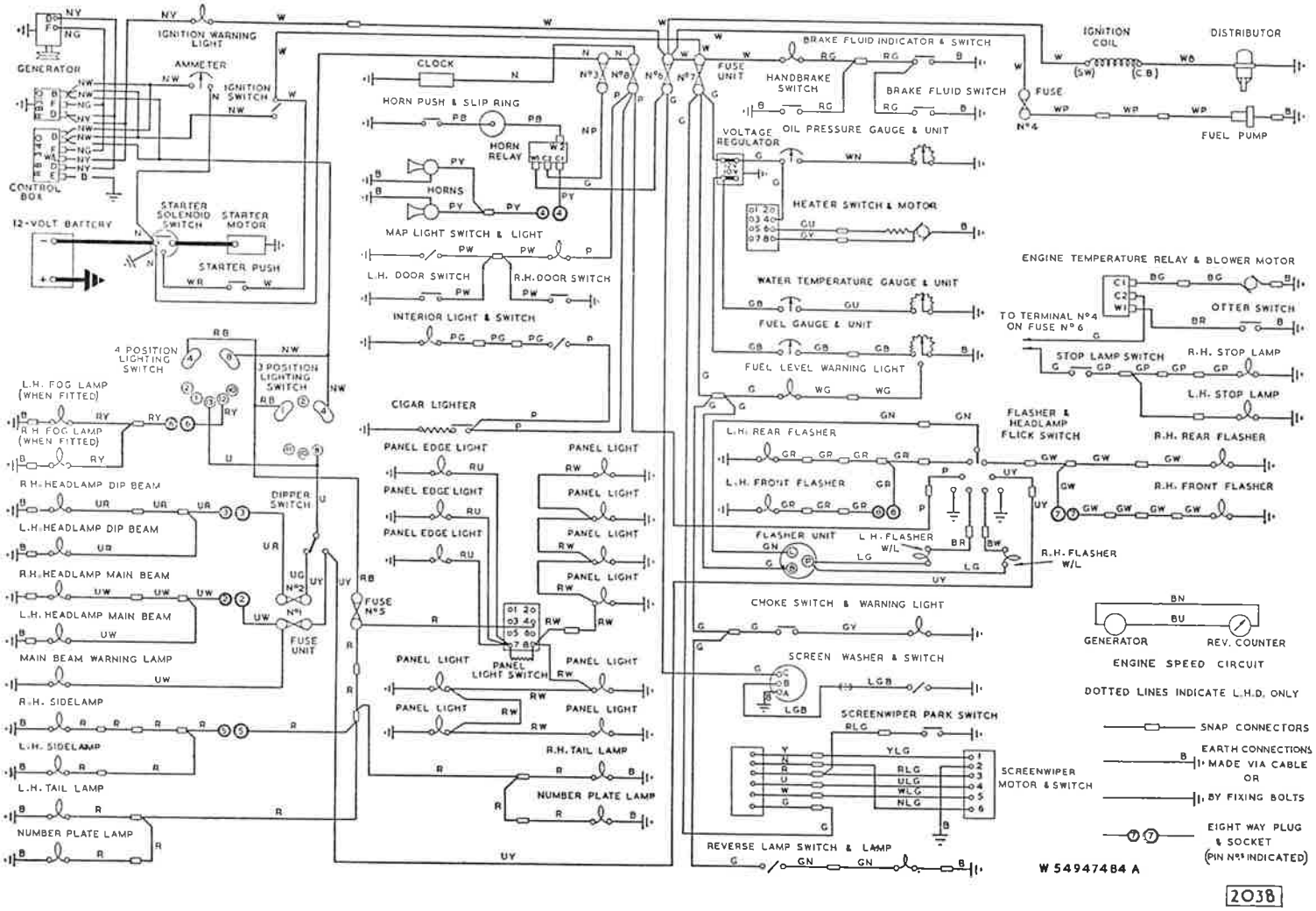

CABLE COLOUR CODE

B	BLACK	P	PURPLE	Y	YELLOW
U	BLUE	G	GREEN	D	DARK
N	BROWN	S	SLATE	L	LIGHT
R	RED	W	WHITE	M	MEDIUM

When a cable has two colour code letters, the first denotes the main colour and the second denotes the tracer colour.

Fig. 46. The wiring diagram.

THE INSTRUMENTS

DASH CASINGS

Removal

Detach one or both dash casings situated beneath the glove box or side facia panel by withdrawing the drive screws, and in the instance of the dash casing on the steering column side, the screwed bezels of the odometer and clock setting drives.

Refitting

Refitting is the reverse of the removal procedure but in the instance of the dash casing on the steering column side, it will be necessary to attach the odometer and clock setting drives to the casing before attaching the latter to the underside of the instrument panel.

THE INSTRUMENT PANEL

Opening

Detach the earth lead from the battery.

Remove the ignition key and cigar lighter for safe keeping. Hinge the centre instrument panel downwards on its bottom edge, after withdrawing the thumb screws situated in each top corner.

Removal

The ingtrument panel can be removed completely by detaching the earth lead from the battery, identifying and removing the leads from the instruments, cigar lighter and switches, removing the electrical harness and clips from the instrument panel and withdrawing the two hinge pivot bolts from the instrument panel support brackets.

Refitting

Refitting is the reverse of the removal procedure, but particular attention must be given to the following point.

That the leads are refitted in accordance with their colour coding, utilizing the wiring diagram as a reference.

Closing

Closing is the reverse of the opening proceedure but particular attention must be given to the following points:

(i) That the leads are replaced in accordance with their colour coding, utilizing the wiring diagram as a reference.

(ii) That the clips securing the main harness to the instrument panel will in no way foul any of the switch or instrument terminals, otherwise a direct short will occur when the battery is connected.

GLOVEBOX—Removal

Disconnect battery.

Lower the centre instrument panel after removing the two retaining setscrews in the top right hand and top left hand corners.

Remove the three setscrews retaining glove box now exposed. Remove the two nuts retaining glove box to the bracket located on side panel below screen pillar.

Detach glove box and disconnect the heater control cables from heater control quadrant. Remove glove box.

Refitting

Refitting is the reverse of the removal procedure. Care must be taken to ensure that the heater control is connected correctly and full travel of the control maintained.

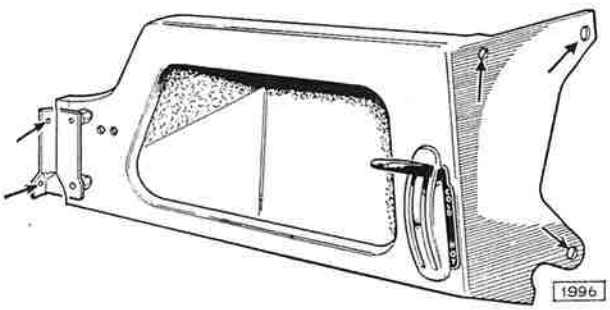

Fig. 47. The glove box showing attachment details.

SIDE FACIA PANEL—Removal

Disconnect battery.

Lower the centre instrument panel after removing the two retaining setscrews in the top right hand and top left hand corners. Remove the three setscrews retaining side facia panel now exposed. Remove the two nuts retaining facia panel to the bracket located on side panel below screen pillar.

Disconnect speedo cable from speedometer and the flexible setting cable from the electric clock.

Remove the circular nut retaining dipper switch to panel and remove switch.

Detach facia panel.

Disconnect the brake fluid level warning light cables from the unit and the electric clock cables from the snap connector.

Disconnect the mixture control cable from the mixture control quadrant and detach the warning light unit by withdrawing the bulb holder from the socket. Disconnect the cable from mixture control warning light switch. Disconnect the two cables attached to the revolution counter and remove the ignition main beam and petrol tank warning lights. Detach the two flasher warning light bulbs by withdrawing the bulb holders from the two sockets; withdraw panel illumination bulbs.

Remove facia panel.

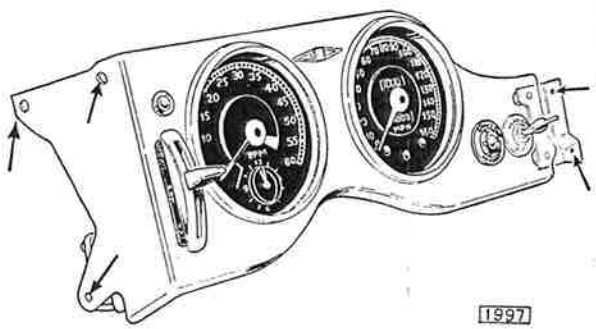

Fig. 48. The side facia panel showing attachment details.

Refitting

Refitting is the reverse of the removal procedure. Care must be taken when refitting to ensure that the mixture control cable is connected correctly and the full travel of the control maintained. Replace flasher warning light units in their correct holders. When refitting dipper switch ensure that the two terminals on the switch with the cables coloured blue/yellow and blue/green are uppermost.

THE SPEEDOMETER

Removal

Detach the earth lead from the battery and raise the steering to the highest position. Detach the speedometer from the facia board by removing the two knurled nuts, earth lead and the two retaining pieces.

Withdraw the flexible drive from the centre of the instrument by slackening the knurled sleeve nut.

Remove the speedometer from the facia board; identify and remove the three warning lamps and the two instrument illumination lamps from the hidden face of the instrument. Remove the flexible odometer trip setting drive by slackening the knurled sleeve nut.

Refitting

Refitting is the reverse of the removal procedure but particular attention must be paid to the following points.

(i) That the two instrument illumination lamps are inserted in the apertures at the side of the instrument.

(ii) That the headlamp warning light is inserted in the right hand bottom aperture.

(iii) That the fuel warning light is inserted in the centre bottom aperture.

(iv) That the ignition warning light is inserted in the left hand bottom aperture.

THE REVOLUTION COUNTER AND CLOCK

The revolution counter and clock are of the electrical type and the electrical leads to both are included in the car harness.

The clock is mounted at the bottom of the revolution counter indicator head and to effect its removal it is necessary to remove the revolution counter from the side facia panel.

The revolution counter consists of an A.C. generator fitted to the rear end of the camshaft with, an indicator head mounted in the side facia panel.

Removal

Detach the earth lead from the battery.

Detach the revolution counter from the facia board by removing the two knurled nuts, earth lead and retaining pieces. Withdraw the revolution counter, remove the two centre leads and the two instrument illumination lamps from the hidden face of the instrument and from the clock at the snap connector.

Detach the flexible clock setting drive by slackening the knurled sleeve nut, and the clock from the revolution counter, by removing the two nuts.

TESTING OPERATION OF REVOLUTION COUNTER

Utilizing an A.C. voltmeter check the current across the terminals of the generator at the rear of the right hand camshaft while the engine is running; as a rough guide it can be assumed that there is one volt output per 100 r.p.m. When electrical current is evident, check the continuity of the two leads by attaching the terminals to the generator and connecting the voltmeter to the opposite ends of the cables after removal from revolution counter. If when running engine continuity is evident, it can be assumed that the instrument is unserviceable and must be exchanged.

THE REVOLUTION COUNTER DRIVE

The revolution counter drive takes the form of a small A.C. electrical generator fitted at the rear R.H. end of the cylinder head where its tongued driving spindle engages a slotted adaptor screwed in the rear end of the inlet camshaft. Leads included in the electrical harness of the car connect with the Lucar tabs pointing upward in the body of the generator and with similar tabs at the rear of the instrument lead in the side facia panel. The Lucar tabs are of the same size and the leads can be fitted either way round.

Removal

Open the engine compartment and detach the earth lead from the battery. Remove the electrical harness from the two Lucar tabs on the A.C. generator on the rear R.H. end of the cylinder head. Detach the A.C. generator from the rear R.H. end of the cylinder head by withdrawing three allen screws and a plate washer, remove the generator in a rearward direction and note the position of the tongued driving spindle.

Refitting

Refitting is the reverse of the removal procedure but particular attention must be given to the following point:

That the tongued driving spindle is positioned in the same attitude as it was when it was removed; whenever difficulty is experienced in engaging the tongued spindle do not apply any force but remove the generator, ascertain the position of the slot in the camshaft with a mirror and set the tongued drive in a similar position.

THE REMOVAL OF THE INSTRUMENT PANEL COMPONENTS

The Ignition Switch

Detach the earth lead from the battery and hinge the instrument panel downward. Identify and remove the leads from the ignition switch. Withdraw the ignition switch from the hidden face of the instrument panel by removing the chrome ring. The lock barrel can be withdrawn by inserting a thin rod through a hole in the body of the switch.

Refitting is the reverse of the removal procedure but particular attention should be given to the following points:

(i) That the number of the ignition key is stamped on the lock barrel.

(ii) That the flat on the thread is positioned toward the right-hand side of the panel.

(iii) That the leads are refitted in accordance to their colour coding, utilizing the wiring diagram as a reference.

Renewing the Cigar Lighter Element

Withdraw the cigar lighter unit from the instrument panel and ensure that it is cold. Place the unit into the palm of the hand, knob first, and hold the sleeve downward against the pressure of the spring with the fingers and unscrew the lighter element and fit a replacement. It must be noted that the spring must not be omitted or tampered with for it ejects the lighter unit when it attains its correct temperature.

Cigar Lighter Unit—Removal

Withdraw the cigar lighter unit, detach the earth lead from the battery and hinge the instrument panel downward. Identify and remove the leads from the cigar lighter housing. Withdraw the cigar lighter housing through the face of the instrument panel after removing the nut and 'U' piece from the centre terminal post. It is not wise to dismantle the cigar lighter housing any further, otherwise direct shorting may occur on assembly.

Refitting is the reverse of the removal procedure but particular attention must be given to the following points:

(i) That the centre terminal post is firm and tight.

(ii) That the insulated washer in the 'U' piece is tight and in good condition, a sub-standard fit and poor condition of this washer could cause a direct short.

(iii) That the black lead is attached by its Lucar connection to the tag at the top of the instrument panel and the purple lead from the main harness is attached to the centre terminal post.

The Starter Push Switch

Detach the earth lead from the battery and hinge the instrument panel downward. Identify and remove the leads from the starter push switch. Withdraw the starter push switch through the face of the instrument panel by removing the nut on the hidden face.

The Head and Side Light Switch—Removal

Remove the light switch control lever from the face of the instrument panel by depressing the plunger in the right hand side.

Detach the earth lead from the battery and hinge the instrument panel downward. Identify and remove the leads from the light switch and detach the light switch from the three posts on the hidden face of the instrument panel by removing the three nuts.

The designation plate can be removed from the face of the instrument panel by detaching the nut on the hidden face.

Refitting

Refitting is the reverse of the removal procedure but particular attention must be given to the following points:

(i) That the designation plate is mounted on the face of the instrument panel by allowing the flat on the threaded barrel to locate a flat in the panel.

(ii) That the control lever is pressed on to the rod of the switch protruding through the face of the instrument panel so that the control rod plunger locates a drilling in the hub of the lever, a smear of vaseline on the plunger greatly facilitates this operation.

(iii) That the leads are refitted in accordance to their colour coding utilizing the wiring diagram as a reference.

The Tumbler Type Switches

Detach the earth lead from the battery and hinge the instrument panel downward. Identify and remove the leads from the Lucar tags on the body of the desired switches and withdraw the tumbler switch from the hidden face of the instrument panel by holding the switch lever in a horizontal position and removing the screwed chromium ring from the face of the instrument panel.

Refitting is the reverse of the removal procedure but particular attention must be given to the following points:

(i) That the switch is fitted to the instrument panel so that the flat face of the switch lever is downward.

(ii) That the leads are refitted in accordance to their colour coding and utilizing the wiring diagram as a reference.

The Ammeter and Oil Pressure Gauge—Removal

Detach the earth lead from the battery and hinge the instrument panel downward. Withdraw the illumination bulb holder from the instrument and detach the leads. Remove the two knurled nuts and 'U' clamp.

Withdraw through front face of panel.

Refitting is the reverse of the removal procedure but particular attention must be given to the following points:

(i) That the 'U' piece is fitted so that it will not foul any terminal or bulb holder, one side is cut away for this purpose.

(ii) That the leads are refitted in accordance with the colour coding utilizing the wiring diagram as a reference.

The Fuel and Water Temperature Gauges

These instruments are removed and refitted in a similar manner to the ammeter and oil pressure gauges but in this instance only one knurled nut secures the 'U' piece.

The removal and replacement of the fuel gauge tank unit and the water temperature transmitter unit are detailed in the "Fuel System" and "Cooling System" sections respectively.

The Voltage Regulator (Fuel and Water Temperature Gauges)

Removal

Detach the earth lead from the battery and hinge the instrument panel downwards. Identify and remove the leads from the voltage regulator situated at the top right hand side of the instrument panel.

Detach the voltage regulator from the panel by removing one nut.

Refitting

Refitting is the reverse of the removal procedure but particular attention must be given to the following points:

(i) That a good earth is made between the voltage regulator and the panel.

(ii) That the leads are refitted in accordance with the colour coding utilizing the wiring diagram as a reference.

Renewing the Switch Indicator Strip Bulbs

Detach the earth lead from the battery and hinge the instrument panel downwards. Three bulbs are provided, one being in each bottom corner and one at the bottom centre. Withdraw the bulb holder from the socket. Remove the bulb from the holder by applying an inward pressure and rotating 90°. The bulb is replaced by inserting the cap in the holder and rotating 90° until the notches in the bulb holder are located.

Remove the indicator strip, chrome finisher and light filter from the bottom edge of the instrument panel by withdrawing the four screws.

THE BI-METAL RESISTANCE INSTRUMENTATION

Engine Temperature, Fuel Tank and Oil Pressure Gauges

DESCRIPTION

The Bi-metal Resistance Instrumentation for engine temperature, petrol tank contents and engine cil pressure consists of a gauge unit fitted in the instrument panel, a transmitter unit fitted in the engine unit or petrol tank and connected together to the battery, the oil pressure gauge being an exception, through a common voltage regulator. The purpose of the latter is to ensure a constant power supply at a predetermined voltage thus avoiding errors due to a low battery voltage. In the instance of the oil pressure gauge this is not quite so critical to supply voltage.

In all systems the gauge unit operates on the thermal principal utilizing a heater winding wound on a bi-metal strip, while the transmitter units of the engine temperature and petrol tank contents gauge are of the resistance type but in both instances the system is voltage sensitive. The transmitter unit of the oil pressure gauge is of the thermal pressure principal utilizing a heater winding wound on a bimetal strip having contact at one end with the second contact mounted on a diaphragm which is sensitive to engine oil pressure.

OPERATION OF THE ENGINE TEMPERATURE GAUGE

The transmitter unit of the engine temperature gauge is fitted in the water outlet pipe of the engine unit and is a variable resistance and consists of a temperature sensitive resistance element contained in a brass bulb. The resistance element is a semi-conductor which has a high negative temperature co-efficient of resistance and its electrical resistance decreases rapidly with an increase in its temperature. As the temperature of the engine unit rises the resistance of the semi-conductor decreases and increases the flow of current through the transmitter similarly a decrease in engine temperature reduces the flow of current.

The gauge unit fitted in the instrument panel consists of a heater winding, connected at one end to the transmitter unit and at the second end to the 'I' terminal of the voltage regulator, wound on a bimetal strip which is linked to the indicator needle. The heater winding and bimetal strip assembly is sensitive to the changes in voltage received from the transmitter unit causing the heater winding to heat or cool in the bimetal strip, resulting in the deflection of the indicator needle over the scale provided. The calibration of the scale is such that the movement of the indicator needle over it is relative to the temperature of the transmitter unit bulb and therefore the temperature of the engine unit.

OPERATION OF THE FUEL TANK GAUGE

The transmitter unit of the petrol gauge is fitted in the petrol tank and is a variable resistance actuated by a float, the arm of which carriers a contact travelling across a resistance housed in the transmitter body. The float arm takes up a position relative to the level of petrol in the tank and thus varies the amount of current passing through the indicator unit.

The gauge unit in the instrument panel consists of a heater winding, connected at one end to the transmitter unit and at the other to the 'I' terminal of the voltage regulator, wound on a bimetal strip which is linked to the indicator needle. The heater winding and bimetal strip assembly is sensitive to the changes in voltage received from the position of the transmitter float, causing the heater winding to heat or cool the bimetal strip, resulting in the deflection of the indicator needle over the scale provided. The calibration of the scale is such that the movement of the indicator needle over it is relative to the position of the transmitter float actuated by the level of the contents in the petrol tank.

Exaggerated indicator needle movement due to petrol swirl in the tank is considerably reduced as there is a delay before current changes from the transmitter unit can heat or cool the bimetal and heater winding assembly in the indicator unit, which in fact causes the deflection of the needle. Similarly the indicator needle will take a few moments to register the contents of the petrol tank when the ignition is first switched on.

ANALYSIS OF THE ENGINE TEMPERATURE AND PETROL TANK GAUGE FAULTS

NOTE: THE INSTRUMENT PANEL GAUGES MUST NEVER BE CHECKED BY SHORT-CIRCUITING THE TRANSMITTER UNITS TO EARTH

Symptom	Unit Possibly at Fault	Action
Instrument panel gauge showing a "zero" reading	Voltage regulator	Check that output voltage at terminal 'I' is 10 volts
	Instrument panel gauge	Check for continuity between the gauge terminals with the leads disconnected.
	Transmitter unit in petrol tank or engine unit.	Check for continuity between the terminal and the case with lead disconnected.
	Wiring	Check for continuity between the gauge, the transmitter and the voltage regulator, also that the transmitter unit is earthed.
Instrument panel gauge showing a high/low reading when ignition switched on	Voltage regulator	Check output voltage at terminal 'I' is 10 volts.
	Instrument panel gauge Transmitter unit in petrol tank or engine	Check by substituting another instrument panel gauge. Check by substituting another transmitter unit in petrol tank or engine unit.
	Wiring	Check for leak to earth.
Instrument panel gauge showing a high reading and overheating	Voltage regulator	Check output voltage at terminal 'I' is 10 volts.
	Wiring	Check for short circuits on wiring to each transmitter unit.
Instrument panel gauge showing an intermittent reading	Voltage regulator	Check by substituting another voltage regulator.
	Instrument panel gauge	Check by substituting another instrument panel gauge.
	Transmitter unit in petrol tank or engine unit	Check by substituting another transmitter unit in petrol tank or engine unit.
	Wiring	Check terminals for security, earthing and wiring continuity.

OPERATION OF THE OIL PRESSURE GAUGE

The transmitter unit of the oil pressure gauge, fitted in the head of the engine oil filter, is a voltage compensated pressure unit and consists of a diaphragm, a bimetal strip with a heater winding wound thereon, a resistance and a pair of contacts. One contact is attached to the diaphragm while the second is mounted on one end of the bimetal strip, the second end of which is connected through the resistance and the gauge unit to the battery supply; the heater winding is also connected to the battery supply but not through the resistance. Engine oil pressure will close the contacts causing current to flow through the gauge unit, bimetal strip and contacts to earth resulting in the heating of the heater winding which will, after a time, open the contacts.

The gauge unit fitted in the instrument panel consists of a winding, connected at one end to the battery supply and at the second to the transmitter unit wound on to a bimetal strip which is linked to an indicating needle. The heater winding and bimetal strip assembly is sensitive to the continuity changes received from the thermal pressure unit, fitted in the engine oil filter, causing the heater winding to heat or cool the bimetal strip resulting in the deflection of the indicating needle over the scale provided.

The changes in continuity of current from the transmitter unit will vary according to the amount of oil pressure for, as the latter rises, the outward moving diaphragm contact limits the return travel of the bimetal strip contact thus allowing a longer continuity period. This results in a greater heating of the heater winding in the gauge unit and increased deflection of the indicating needle over the scale showing a greater oil pressure.

The opening and closing of the transmitter unit contacts is continuous thus the temperature of the heater winding in the gauge unit is kept within close limits and the calibration of the scale is such that the movement of the indicating needle over it is relative to the opening of the transmitter unit contacts and therefore the oil pressure of the engine is recorded.

ANALYSIS OF THE OIL PRESSURE GAUGE FAULTS

Symptom	Unit Possibly at Fault	Action
Instrument panel gauge showing a "zero" reading	Wiring	Check for continuity between the gauge and the transmitter unit and that the latter is earthed.
	Instrument panel gauge	Check for continuity between the gauge terminals with leads disconnected. If satisfactory replace the transmitter unit.
Instrument panel gauge showing a reading with ignition switched on but engine not running	Transmitter unit on oil filter head	Check by substituting another transmitter unit.
Instrument panel gauge showing a high reading and overheating	Transmitter unit on oil filter head	Check by substituting another transmitter unit.
Instrument panel gauge showing a below "zero" reading with ignition switched off	Instrument panel gauge	Check by substituting another instrument panel gauge.

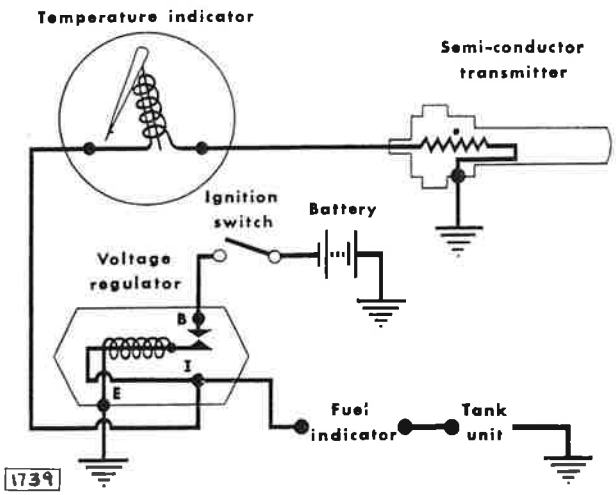

Fig. 49. The combined wiring diagram of the fuel tank contents and water temperature gauges with the voltage regulator.

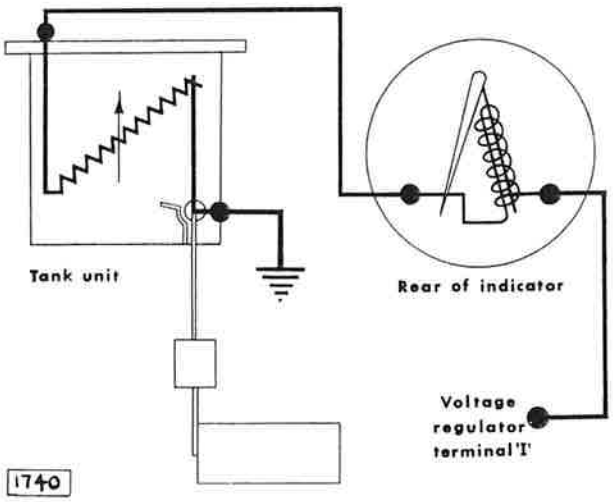

Fig. 50. The fuel tank contents gauge circuit.

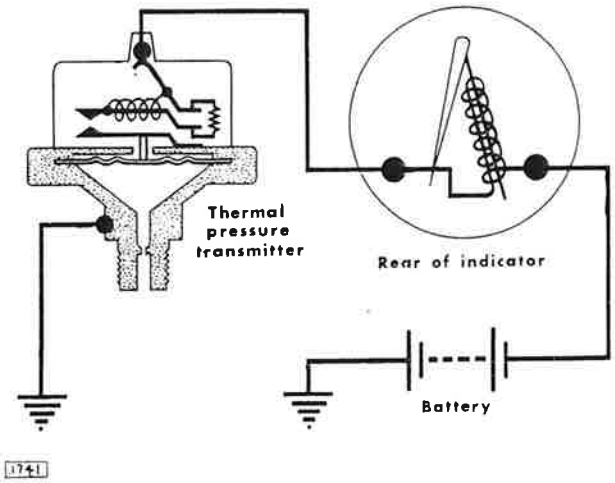

Fig. 51. The engine oil pressure gauge circuit.

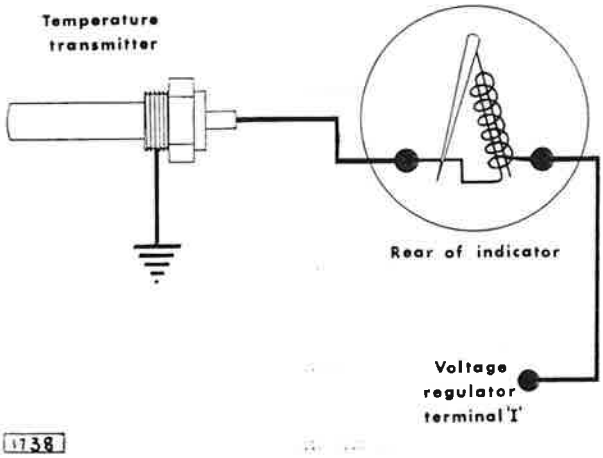

Fig. 52. The water temperature gauge circuit.

THE SPEEDOMETER DRIVE CABLE

Removal

Disconnect the flexible drive cable and remove the speedometer from the side instrument facia as previously detailed. Detach the flexible drive cable from the right-angle drive attachment on the gearbox and release it from the retaining clips.

Refitting

Refitting is the reverse of the removal procedure but particular attention must be given to the following points:

(i) That the run of the flexible drive cable is without any sharp bends.

(ii) That the securing clips are so shaped that they only hold the cable in position without crushing it.

SPEEDOMETER CABLE—GENERAL INSTRUCTIONS

Flexible cable condition to a great extent affects performance of speedometers. Poor installation or damage to the flexible drive will show up as apparent faults. It is most important that the flexible drive should be correctly fitted and maintained as illustrated in the following diagrams.

1. **Smooth Run**

   Run of flexible drive must be smooth. Minimum bend radius 6". No bend within 2" of connections.

2. **Securing**

   Avoid sharp bends at clips. If necessary change their positions. Do not allow flexible drive to flap freely. Clip at suitable points.

3. **Securing**

   Avoid crushing flexible drive by over-tightening clip.

4. **Connection**

   Ensure tightness of outer flex connections. They should be finger tight only. It may be necessary to clean thoroughly the point of drive before the connection can be screwed completely home.

5. **Connection of Inner Flexible Shaft**

   Where possible slightly withdraw inner flex and connect outer first. Then slide inner into engagement.

6. **Removal of Inner Shaft**

   Most inner flexes can be removed by disconnecting instrument end and pulling out flex. Broken inner flex will have to be withdrawn from both ends.

7. **Examination of Inner Flexible Shaft**

   Check for kinked inner flexible shaft by rolling on clean flat surface. Kinks will be seen and felt.

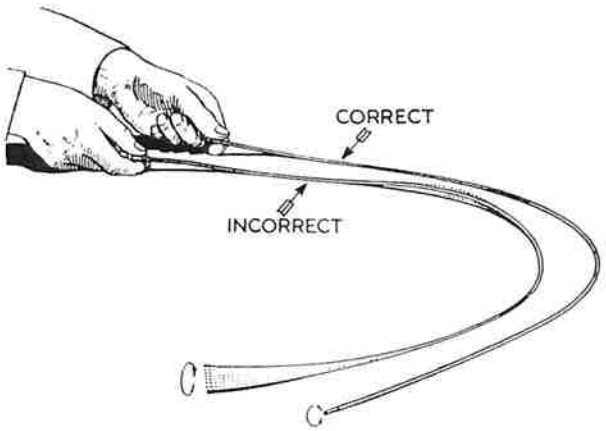

Fig. 53. Checking the inner flex for kinks.

8. **Lubrication Every 10,000 Miles**

   Withdraw inner flexible drive (see paragraph 6). Place blob of grease on end of outer cable and insert flex through it, carrying grease inside. Use Esse T.S.D. 119 or equivalent. Do NOT use oil.

9. **Excessive Lubrication**

   Avoid excessive lubrication. If oil appears in flexible drive, suspect faulty oil-seal at point of drive.

10. **Inner Shaft Projection**

Check $\frac{3}{8}''$ projection of inner flex beyond outer casing at instrument end. This ensures correct engagement in instrument and point of drive.

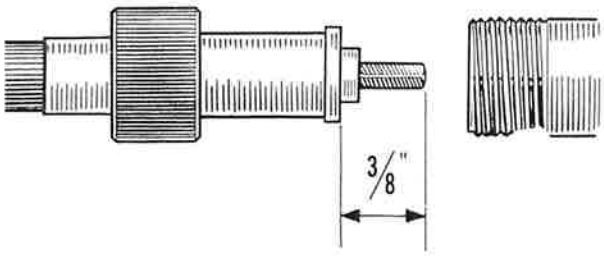

Fig. 54. Showing the amount the inner flex must protrude from outer cable.

11. **Concentric Rotation**

Check that inner flex rotates in centre of outer cable.

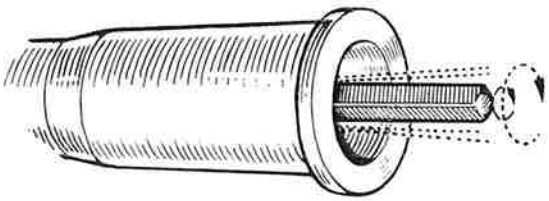

Fig. 55. Checking the inner flex for "run-out."

12. **Damaged Inner Shaft**

Examine inner flex ends for wear or other damage. Before fitting new flex ensure instrument main spindle is free.

13. **Damage Drive End Connections**

Examine point of drive for damage or slip on gears in gearbox.

14. **Ensuring Correct Drive Fitted**

When ordering, state Make, Year and Model of vehicle. State also length of drive required when alternatives are shown.

SPEEDOMETERS—GENERAL INSTRUCTIONS

Speedometer performance is dependent on the flexible drive, and apparent faults in the instrument may be due to some failure of the drive. Before returning a speedometer for service, the flexible drive should be checked, as described in the previous paragraphs. The following diagrams show you how to check the instrument performance.

15. **Instrument Not Operating**

Flexible drive not properly connected (see paragraph 5). Broken or damaged inner flexible shaft or fault at point of drive (see paragraphs 12 and 13), in which case remove and replace flex (see paragraphs 6 and 8) or rectify point of drive fault. Insufficient engagement of inner shaft (see paragraph 10). Defective instrument—return for service.

16. **Instrument Inaccurate**

Incorrect speedometer fitted. Check code number.

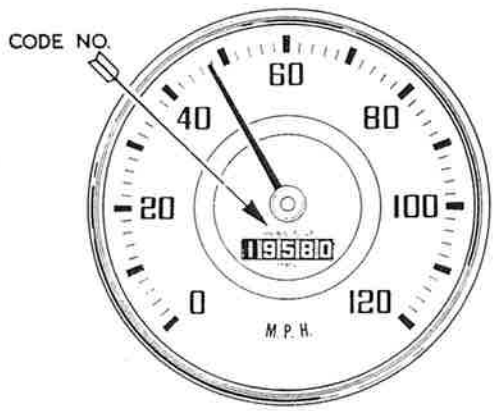

Fig. 56. Showing the code number on the face of the instrument.

17. **Speedometer Inaccurate**
Check tyre pressures. Inaccuracy can be caused by badly worn tyres. Non-standard tyres fitted, apply to Smiths for specially calibrated instrument.

18. **Speedometer Inaccurate**
Rear axle non-standard. Drive ratio in vehicle gearbox non-standard. A rapid and simple check is obtained by entering in the formula the figures found in the test (see paragraph 19).

$$\frac{1680\ N}{R} = \text{T.P.M. No.}$$

Where N = Number of turns made by the inner shaft for 6 turns of rear wheel and R = Radius of rear wheel in inches measured from centre of hub to ground.

Example

Cardboard pointer on inner shaft (see 19) rotates $9\frac{1}{8}$ times as vehicle is pushed forward 6 turns of rear wheel. Rear wheel radius $12\frac{1}{4}$".

Flex turns per mile:

$$\frac{1680 \times 9\frac{1}{8}}{12\frac{1}{4}} = \frac{15330}{12\frac{1}{4}} = 1251 = \text{T.P.M. No.}$$

19. **Gearing Test**
Disconnect flexible drive from speedometer. With the gears in neutral, count the number of turns of the inner shaft for six turns of the rear wheels when the vehicle is pushed forward in a straight line. Measure rolling radius of rear wheels—centre of hub to ground. Apply figures in formula (see paragraph 18).

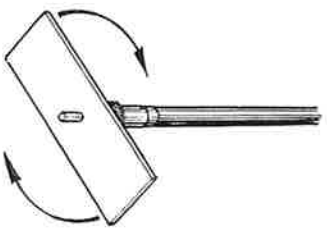

Fig. 57 Cardboard counter on the inner flex for checking the number of turns.

20. **Correct Speedometer**
Number illustrated should correspond within 25 either way with the number obtained from paragraphs 18 and 19. If it does not, apply to Smiths for specially calibrated instrument, giving details of test and vehicle.

Fig. 58 Showing the turns per mile on the face of the instrument.

21. **Pointer Waver**
Oiled up instrument. Replace oil seal if necessary, clean and lubricate flexible drive (see paragraph 8). Return instrument for replacement.

22. **Pointer Waver**
Inner flexible shaft not engaging fully. Check 10, then try 4. Also check 12.

23. **Pointer Waver**
Kinked or crushed flexible drive. Check 7 and 3. For withdrawal of inner shaft see paragraph 6. Bends of too small radius in flexible drive, check 1.

24. **Pointer Waver**
If 21, 22 and 23 show no sign of trouble, instrument is probably defective. Return for replacement.

25. **Noisy Installation**
Tapping noises. Check 5 and 2. Flexible drive damaged. Check 7 and 12 (also see paragraph 6), check lubrication is sufficient. Check 10 and 11.

26. **Noisy Installation**
General high noise level. Withdraw inner shaft (see paragraph 6) and reconnect outer flex. If noise continues at lower level then source of noise is in vehicle point of drive. Fitting new P.V.C. covered flexible drive with nylon bush on inner shaft and instrument with rubber mounted movement should overcome this trouble.

27. **Noisy Installation**
Regular ticking in time with speedometer decimal distance counter. Return speedometer for replacement.

28. **Noisy Installation**
Loud screeching noise more prevalent in cold weather return instrument for replacement.

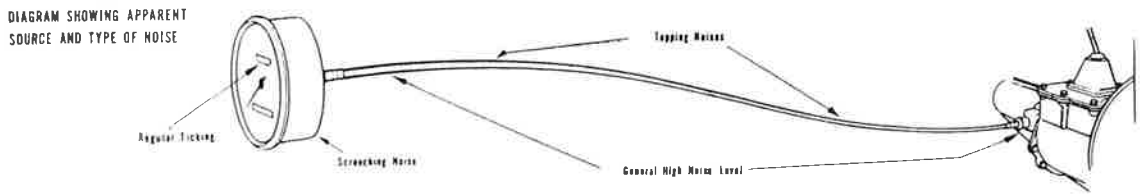

Fig. 59 Diagram showing apparent source and type of noise

RIGHT ANGLE DRIVE ATTACHMENT

No provision is made for lubrication or dismantling this unit. If faulty remove and replace with new unit.

Removal

Detach the speedometer cable from unit.

Remove unit from gearbox by releasing the large thumb nut.

Refitting

Refitting is the reverse of the removal procedure but particular attention must be given that the square drive shaft protruding from the unit has entered into the gearbox drive correctly before tightening nut.

Printed in England by Buckler & Webb Ltd., Church Street, Birmingham 3